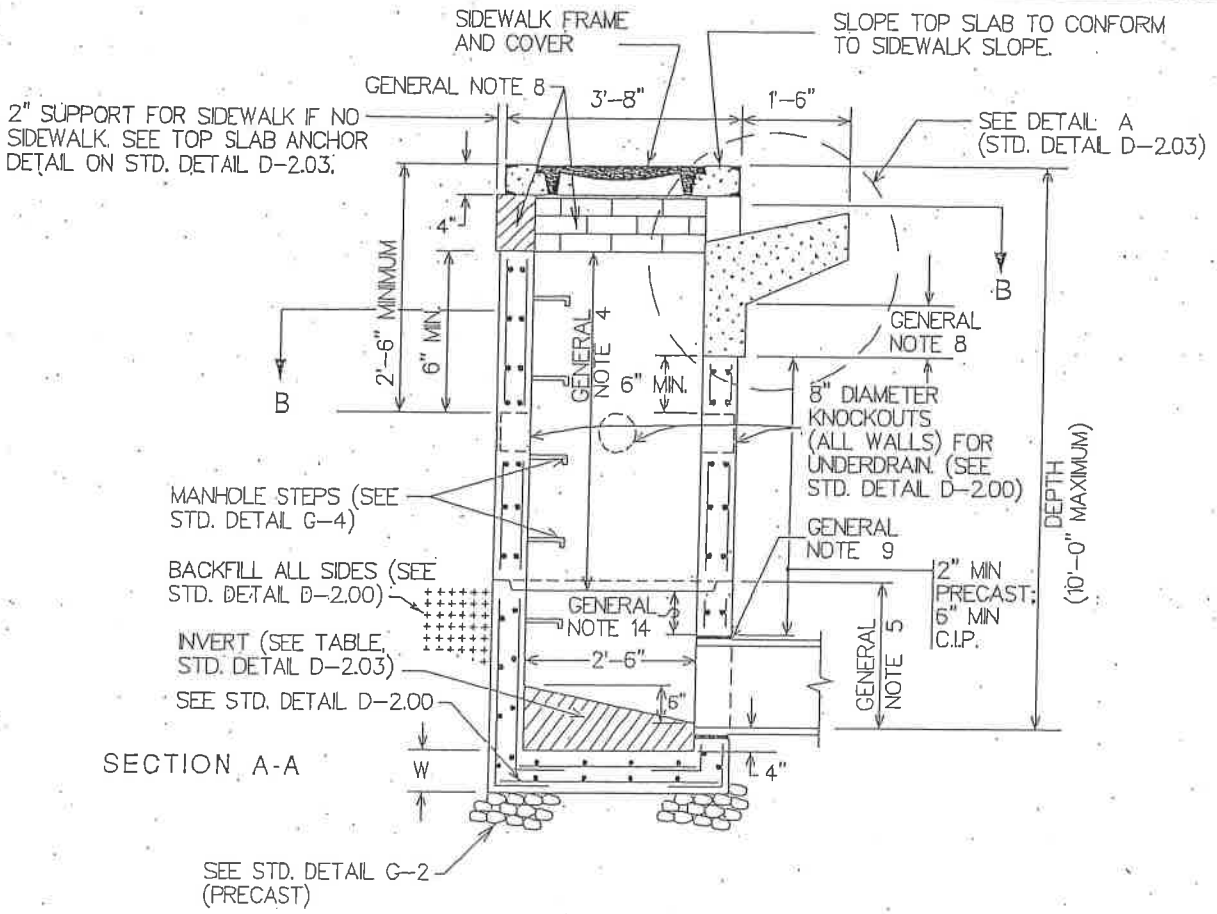


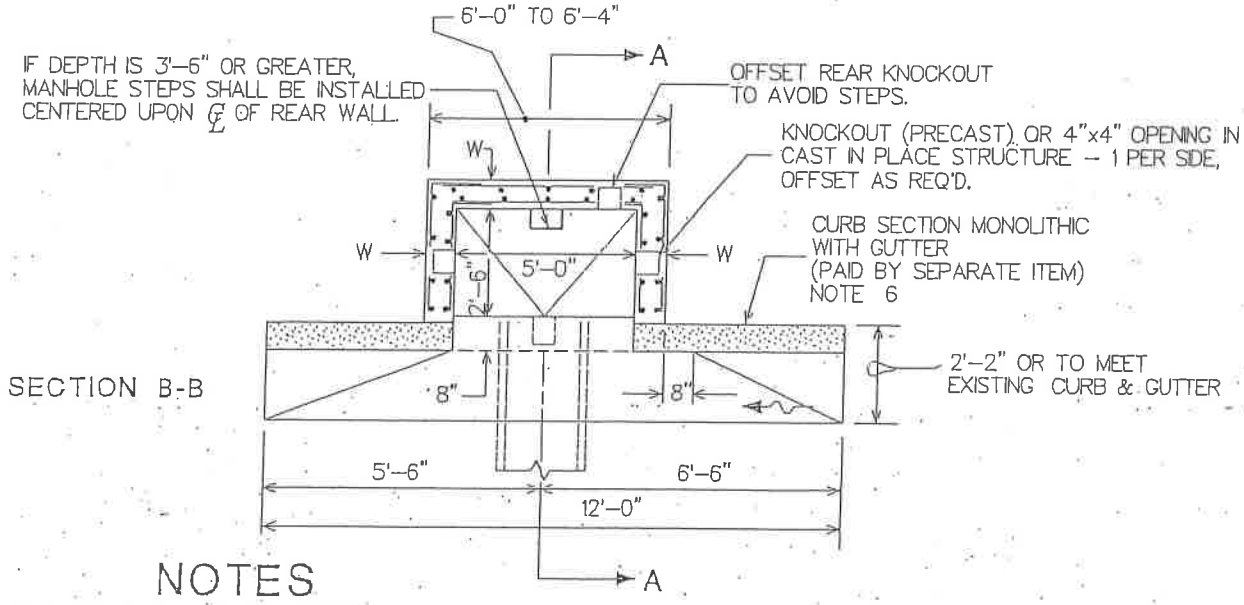


## NOTES

1. SEE STD. DETAIL D-2.00 FOR GENERAL NOTES.
2. SEE STD. DETAIL D-2.05 FOR PRECAST TOP SLAB.
3. DRAWING SHOWS PRECAST INLET. CAST-IN-PLACE INLET PER TABLE, STD. DETAIL D-2.03.
4. PREVIOUSLY STD. DETAIL D-2.00.
5. INLETS SHALL NOT BE USED IN LOCATIONS WHERE THE TOP SLAB MAY REASONABLY BE EXPECTED TO EXPERIENCE TRAFFIC LOADS.
6. DEVELOPMENT PROJECTS: CURB SECTION PAID FOR BY THE HIGHWAY CONTRACT.

| | | | |
|---|---|---|---|
| BALTIMORE COUNTY MARYLAND | APPROVAL<br>DIRECTOR<br>William Rossman<br>BUR. OF ENGINEERING/CONSTRUCTION<br>3/18/02<br>DATE | DEPARTMENT OF PUBLIC WORKS<br>STORM DRAINAGE DETAILS<br>TYPE A-1 INLET | ISSUED: OCTOBER 1977<br>REVISED: SEPTEMBER 16, 1991<br>REVISED: JANUARY 2002<br>PLATE<br>D-2.01A |

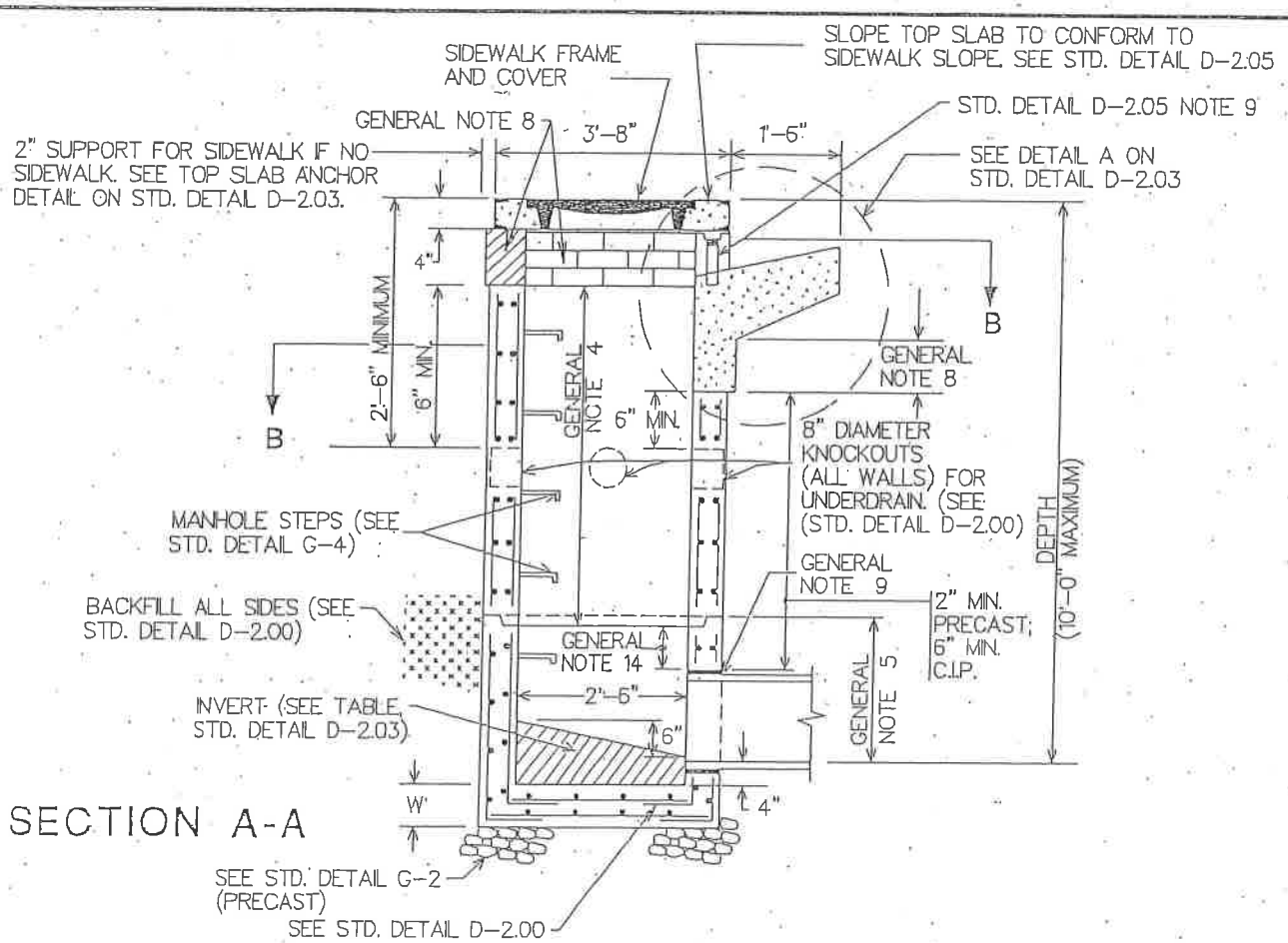


SECTION A-A

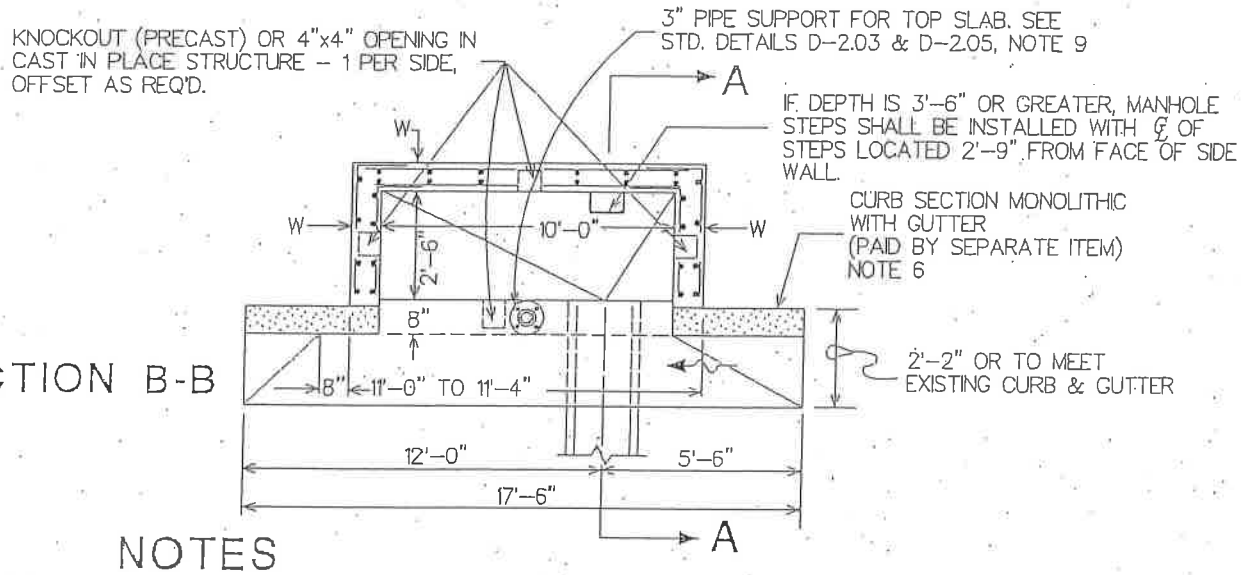


SECTION B-B

## NOTES

1. SEE DETAIL D-2.00 FOR GENERAL NOTES.
2. SEE DETAIL D-2.05 FOR PRECAST TOP SLAB.
3. DRAWING SHOWS PRECAST INLET. CAST-IN-PLACE INLET PER TABLE, STD. DETAIL D-2.03.
4. PREVIOUSLY STD. DETAIL D-2.02
5. INLETS SHALL NOT BE USED IN LOCATIONS WHERE THE TOP SLAB MAY REASONABLY BE EXPECTED TO EXPERIENCE TRAFFIC LOADS.
6. DEVELOPMENT PROJECTS: CURB SECTION PAID FOR BY THE HIGHWAY CONTRACT.

| | | | |
|---|---|---|---|
| BALTIMORE COUNTY MARYLAND | APPROVAL<br>DIRECTOR<br>BUR. OF ENGINEERING/CONSTRUCTION<br>3/18/02<br>DATE | DEPARTMENT OF PUBLIC WORKS<br>STORM DRAINAGE DETAILS<br>TYPE B-1 INLET | ISSUED: OCTOBER 1977<br>REVISED: SEPTEMBER 16, 1991<br>REVISED: JANUARY 2002<br>PLATE<br>D-2.02A |

NOVEMBER 1996 JAY

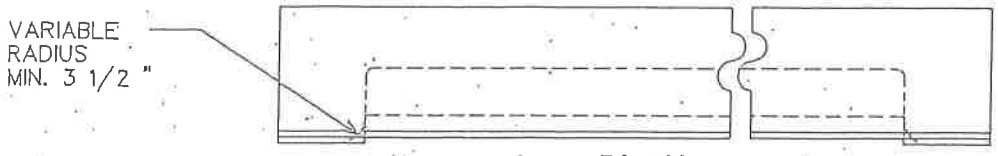


PLAN

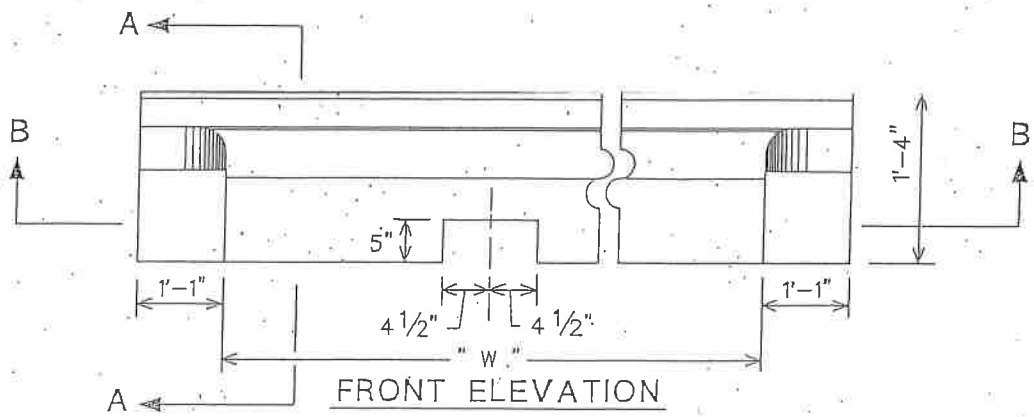


FRONT ELEVATION

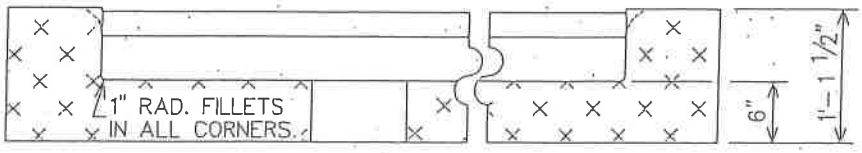


SECTION B-B

#3 x 10" BENT BARS WELDED
TO L @ 16" O/C (SHOWN)
OR
4" [ 5.4# (DETAIL D-2.10 ONLY)

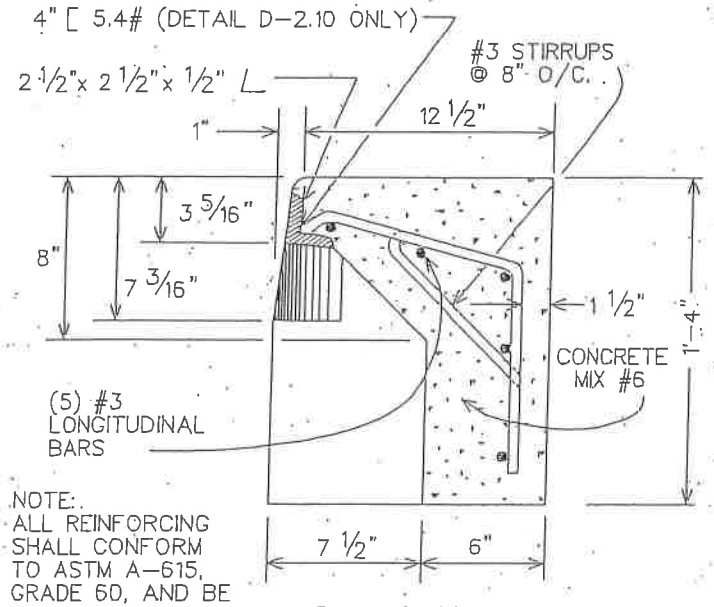


NOTE:
ALL REINFORCING SHALL CONFORM TO ASTM A-615, GRADE 60, AND BE RUST-FREE AT WELDS.

SECTION A-A

SPECIAL PREFAB CURB DETAIL

NOTE: FOR STATE HIGHWAYS USE APPROPRIATE CURB PIECE FROM MdSHA DETAILS.

| INLET TYPE | DETAIL | THROAT WIDTH " W " | SUPPORT BEAM NOTCH |
|---|---|---|---|
| E COMB.† | D-2.07 | 4'-1" | OMIT |
| Dbl. E COMB.‡ | D-2.10 | 8'-2" | REQUIRED |
| S COMB.† | D-2.18 | 4'-1" * | OMIT |
| Dbl. S COMB.† | D-2.20 | 5'-6 1/2" | REQUIRED |

* FOR S COMBINATION MODIFY FOR LEFT OR RIGHT INLET OFFSET. SEE PLAN AND SECTION "B-B" ON PLATE D-2.18.

† EXPOSED ANGLES TO BE GALVANIZED IN ACCORDANCE WITH A.S.T.M. A-123 EXCEPT FOR ADHERENCE WHICH SHALL BE IN ACCORDANCE WITH A.S.T.M. A-153.

‡ EXPOSED CHANNEL TO BE PRIMERED & PAINTED WITH APPROVED PAINT PRIOR TO DELIVERY.

BALTIMORE COUNTY MARYLAND

APPROVAL
DIRECTOR
William Bowman
BUR. OF ENGINEERING/CONSTRUCTION
11/22/00
DATE

DEPARTMENT OF PUBLIC WORKS
STORM DRAINAGE DETAILS

# COMBINATION INLET CURB PIECE

ISSUED: OCTOBER, 1977
REVISED: JANDARY, 1985
REVISED: AUGUST, 1997

PLATE
D-2.08

## TOP SLAB:

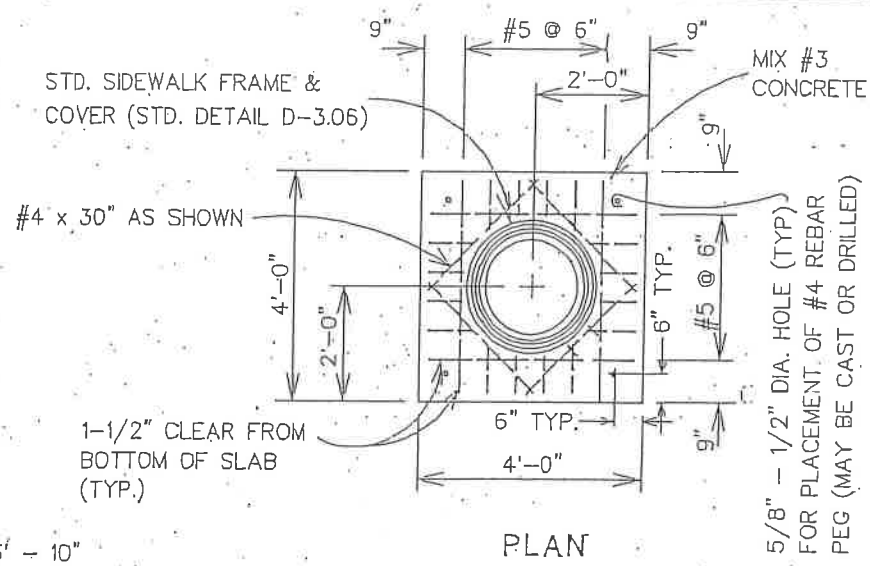


PLAN

## CONCRETE COLLAR:

(IF INDICATED ON PLANS)

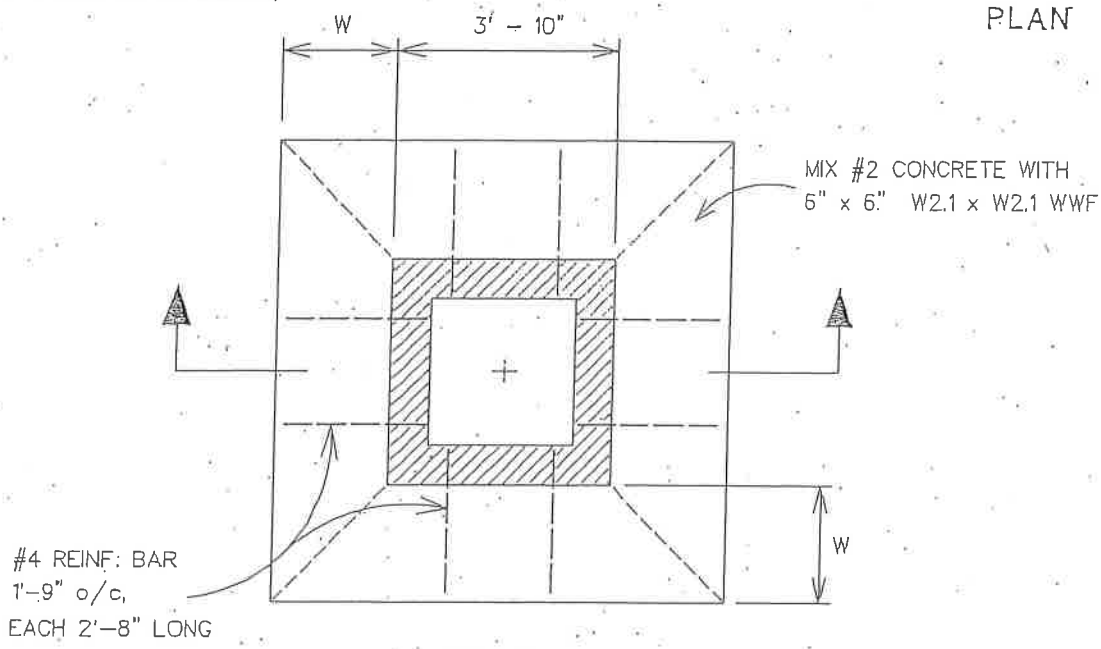


PLAN

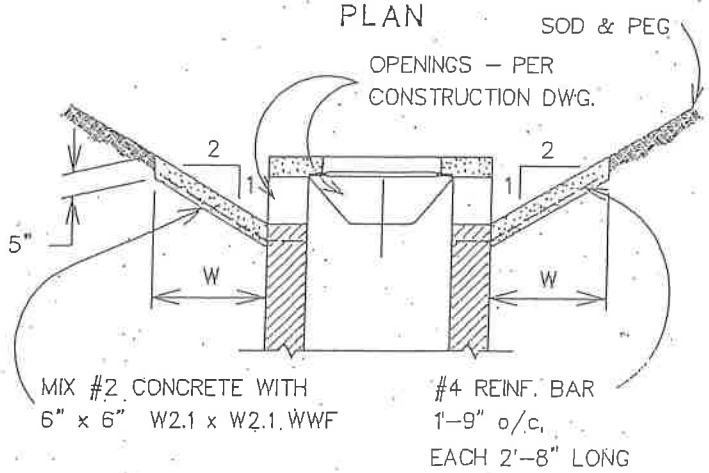


W = 2'-0" OR AS INDICATED ON CONSTRUCTION DRAWING.

SECTION A - A

| | | | |
|---|---|---|---|
| BALTIMORE COUNTY MARYLAND | APPROVAL<br>DIRECTOR<br>William Kuppman<br>BUR. OF ENGINEERING CONSTRUCTION<br>3/18/02<br>DATE | DEPARTMENT OF PUBLIC WORKS<br>STORM DRAINAGE DETAILS<br>TYPE Y-1 INLET<br>DETAILS | ISSUED: AUGUST, 1997<br>REVISED: MARCH, 2002<br>REVISED:<br>PLATE<br>D-2.22B |