mA 2090

Nov-24-99 02:56pm From-LUMEC INC

LUMEC

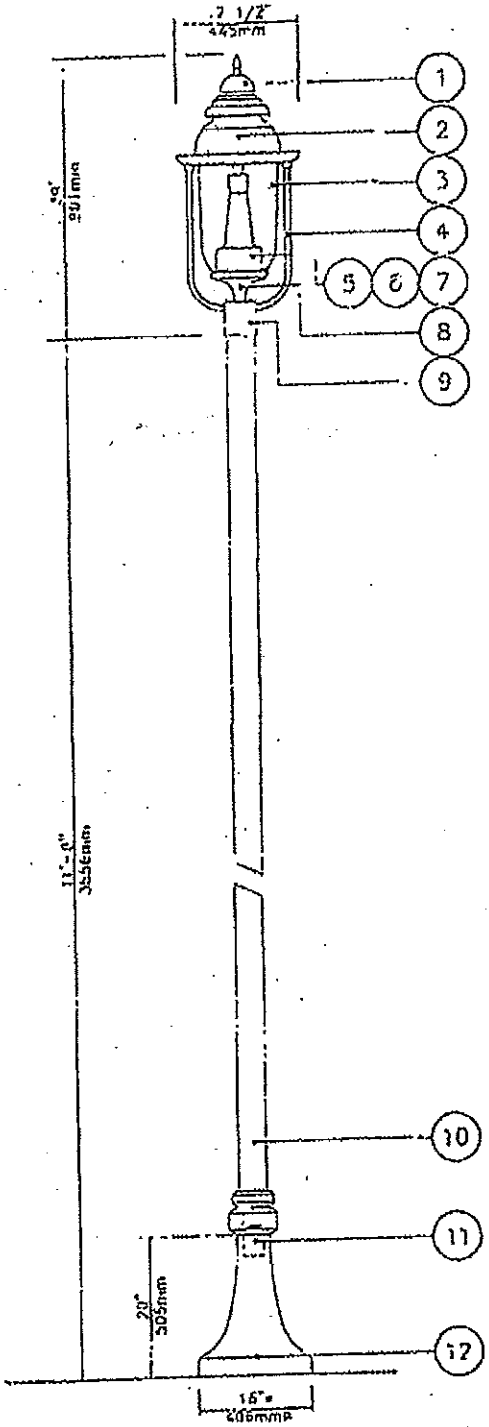

ANCHOR PLATE

- B.C. 6 3/4"ø 171mmø
- CAST ALUMINUM
- NOTE: This anchor plate accepts a bolt circle from 6 3/4"ø @ 10"ø 171mmø @ 254mmø

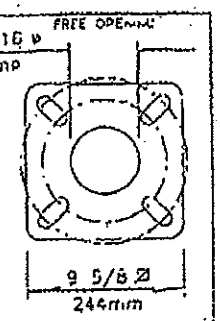

— NOT TO SCALE —

BASE DETAILS
BOLT PROJECTION

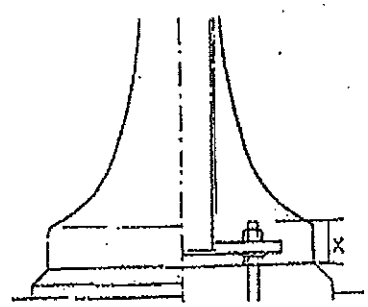

X = 3"(76mm)

— NOT TO SCALE —

STEEL ANCHOR BOLTS
3/4"(19mm)ø
(supplied by others)

NOTE: Pole height is: 12'-0" (3658mm)

TITRE
TITLE

ENREGISTRÉ ISO 9002 REGISTERED

TOWSON ROUNDABOUT AND STREET SCAPE

L31 (type: 3&2, 1&2)

15412

ÉCHELLE/SCALE	N°	REVISION	PAR/BY	DATE	VER	PAR/BY	N° DE DESSIN / DRAWING N°	PAGE
1/2"=1'-0"				11-24-99		F.R.	L31 55872A	1/2

LUMEC

DESCRIPTION OF COMPONENTS:

TYPE 3 & 2
LUMINAIRE: 100MH-L31-PC-C-SE3-QTA/208-1-FNC-FS(2)-SCTX (qty: 4)
POLE: APR4F-12-IP-LBC1-SCTX. (qty: 4)
TYPE 1 & 2
LUMINAIRE: 175MH-L31-PC-C-SE3-QTA/208-1-FNC-FS(2)-SCTX. (qty: 9)
POLE: APR4F-12-IP-LBC1-SCTX. (qty: 9)

1 CUPOLA Decorative elements made of spun copper with finial painted copper, mechanically secured

2. HOOD: Made of spun aluminum.

3. GLOBE Made of clear polycarbonate.

4 DECORATIVE ROD: Made of bent aluminum, 3/4" (19mm) O.D., welded to the fitter

5. TYPE 3 & 2
LAMP: 100 watt, metal halide, ED 17 bulb, medium base, not included.
TYPE 1 & 2
LAMP: 175 watt, metal halide, BT 28 bulb, mogul base, not included

6. OPTICS: SE3 system made of a chemically brightened, multi faceted, anodized aluminum hydroformed reflector, giving a type 3 (asymmetrical) distribution.

7 BALLAST High power factor of 90%, -20°F (-30°C) lamp starting capacity, quadruple tap, 120, 208, 240, 277 volt, wired at 208 volt, c/w quick disconnect plug and fuses

8 BASE: Made of cast aluminum, welded to the fitter.

9. FITTER. Made of aluminum tubing, 4 1/2" (114mm) O.D., conceived to be adapted on a 4" (102mm) O.D., by 4" (102mm) long tenon.

10. POLE: Made of aluminum, 4" (102mm) O.D., .125" (3mm) wall thickness, welded to the anchor plate.

11 ACCESS DOOR: Made of aluminum, covering an opening of 2" x 4 1/2" (51mm x 114mm), giving access to a ground lug.

12 BASE COVER Made of a two-piece cast aluminum components, mechanically secured

WIRING Included. 6" (152mm) minimum exceeding from luminaire.

GASKETING: Neoprene and/or silicone gasketing is applied.

HARDWARE: All exposed screws will be stainless steel.

OPTION "IP". Pole will be painted inside.

FINISH: An application of a thermosetting polyester powder coat paint, applied by means of an electrostatic process, special color to be PT311G202 textured.

TITRE/TITLE TOWSON ROUNDABOUT AND STREET SCAPE 15412

N°	REVISION	PAR / BY	DATE	VER	PAR / BY	N° DE DESSIN / DRAWING N°	PAGE
			11-24-99		FR	L31 55872A	2/2

LUMEC
Tel (450)430-7040
Fax (450)430-1493

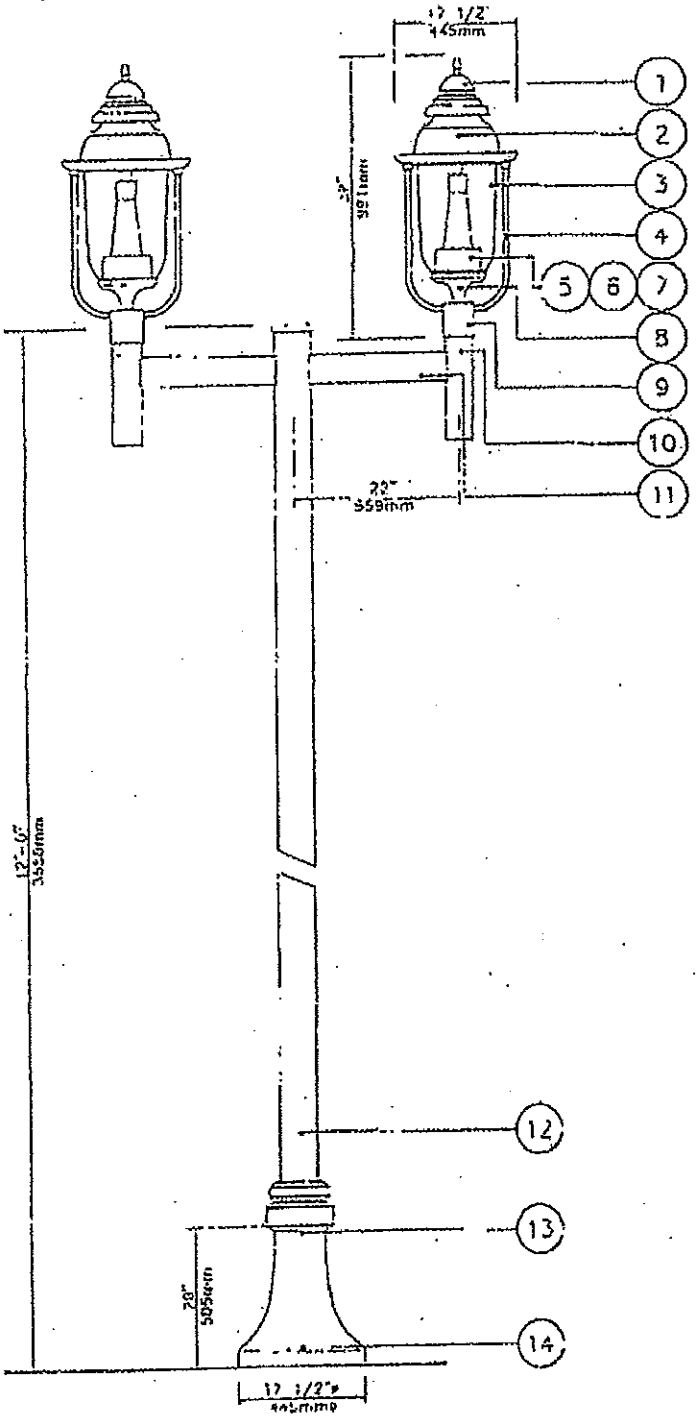

ANCHOR PLATE

- B.C.: 11 1/2 ø
  292mmø
- CAST ALUMINUM
- NOTE
  This anchor plate accepts a bolt circle from 9 1/4 ø @ 12 3/4 ø
  234mmø @ 324mmø

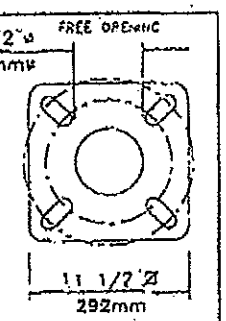

- NOT TO SCALE -

BASE DETAILS
BOLT
PROJECTION

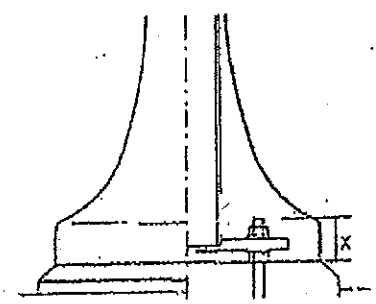

X = 3"(76mm).

- NOT TO SCALE -

STEEL ANCHOR BOLTS
3/4"(19mm)ø
(supplied by others)

TITRE
TITLE

ENREGISTRÉ
ISO 9002
REGISTERED

TOWSON ROUNDABOUT AND STREET SCAPE

L31 (type: 4)

75412

ECHELLE/SCALE	N°	REVISION	PAR/BY	DATE	VER	PAR/BY	N° DE DESSIN / DRAWING N°	PAGE
/2"=1'-0"				11-24-99		F R	L31 55872B	1/2

LUMEC

DESCRIPTION OF COMPONENTS:

LUMINAIRE: 100MH-L31-PC-C-SE3-QTA/208-FNC-FS(2)-SCTX (qty: 10)
BRACKET: CR-2-SCTX (qty: 5)
POLE: APR5R-12-IP-LBC1-SCTX. (qty: 5)

1 CUPOLA. Decorative elements made of spun copper with finial painted copper, mechanically secured.

2. HOOD. Made of spun aluminum.

3. GLOBE. Made of clear polycarbonate.

4 DECORATIVE ROD Made of bent aluminum, 3/4" (19mm) O.D., welded to the fitter.

5 LAMP: 100 watt, metal halide, ED 17 bulb, medium base, not included

6. OPTICS. SE3 system made of a chemically brightened, multi faceted, anodized aluminum hydroformed reflector, giving a type 3 (asymmetrical) distribution.

7 BALLAST. High power factor of 90%, -20°F (-30°C) lamp starting capacity, quadruple tap, 120, 208, 240 277 volt, wired at 208 volt, c/w quick disconnect plug and fuses

8 BASE. Made of cast aluminum, welded to the fitter

9 FITTER: Made of aluminum tubing, 4 1/2" (114mm) O.D., conceived to be adapted on a 4" (102mm) O D , by 4" (102mm) long tenon.

10. POLE. Made of aluminum, 5" (127mm) O.D., .247" (6mm) wall thickness, welded to the anchor plate.

11 ACCESS DOOR: Made of aluminum, covering an opening of 2" x 4 1/2" (51mm x 114mm), giving access to a ground lug.

12 BASE COVER: Made of a two-piece cast aluminum components, mechanically secured

WIRING: Included, from luminaire to the top of pole.

GASKETING Neoprene and/or silicone gasketing is applied.

HARDWARE: All exposed screws will be stainless steel.

OPTION "IP": Pole will be painted inside.

FINISH An application of a thermosetting polyester powder coat paint, applied by means of an electrostatic process, special color to be PT311G202 textured.

TITRE/TITLE TOWSON ROUNDABOUT AND STREET SCAPE							15412
N°	REVISION	PAR / BY	DATE	VER:	PAR / BY	N° DE DESSIN / DRAWING N°	PAGE
			11-24-99		F.R.	L31 55872B	2/2

THIS DRAWING IS FOR REFERENCE ONLY. CHECK FOR LATEST REVISION PRIOR TO ORDERING

SALES	ENG.	CUST.
	MB.	

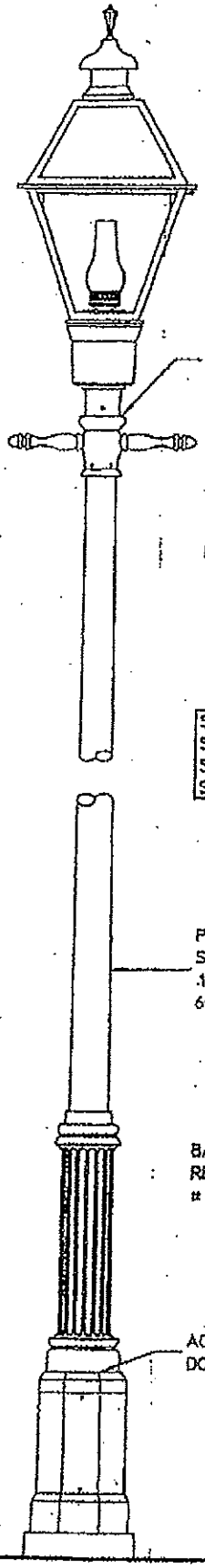

FIXTURE DETAIL
SCALE 1:10

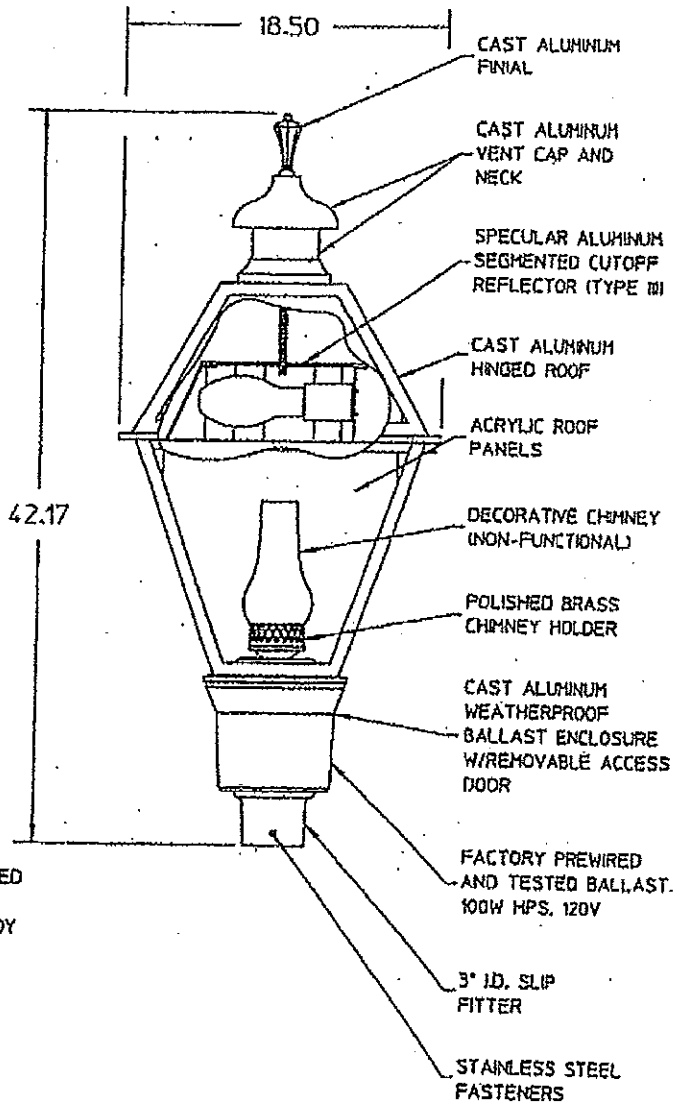

S5954: FIXTURE
SA5954: LADDER REST
SP5954: 12' POLE
SP5954A: 10' POLE

REVISIONS: 11/01/99 TAG chgd job name, updated cutsheet

HADCO®
ARCHITECTURAL OUTDOOR LIGHTING
a GENLYTE company

100 Railway P.O. Box 128
Littlestown, Pennsylvania 17340-0128
Phone 717-359-7131
Fax 717-359-9515

JOB NAME: Reisterstown Road

SCALE:	DATE:	DRAWN BY:	DRAWING NUMBER:
1:16	11/01/99	TAG	S5954

REP:	QUOTE #:	DIST:
Genlyte Baltimore		

PRODUCT APPROVALS		
SALES	ENG.	CUST.

NOTICE:
THIS DRAWING IS FOR REFERENCE ONLY. CHECK FOR LATEST REVISION PRIOR TO ORDERING

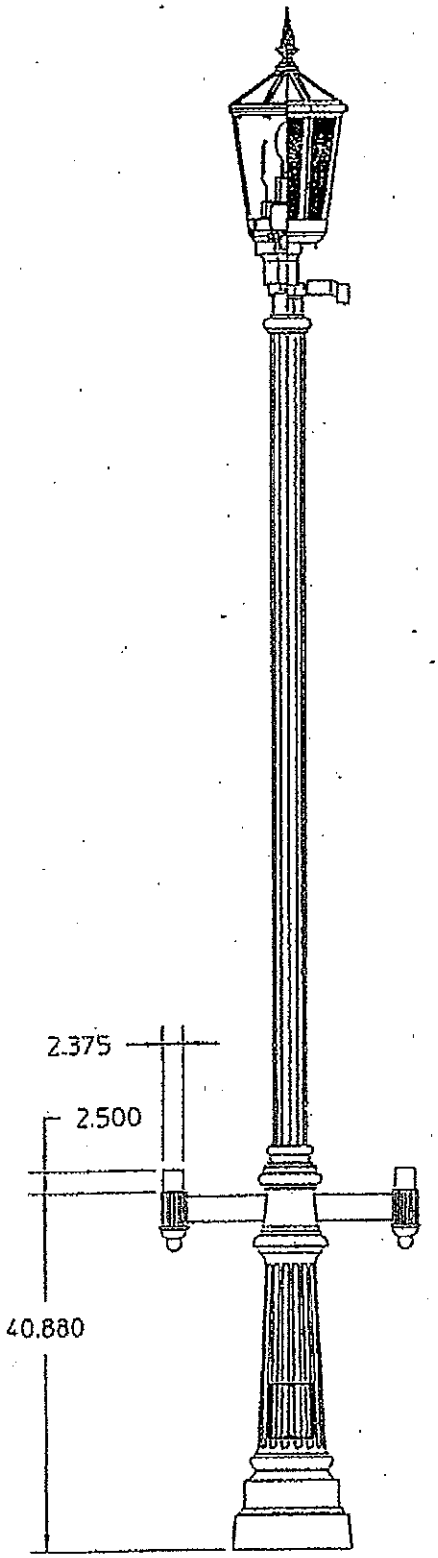

FIXTURE: S6247

DIMENSIONS
HEIGHT: 35 15/64"
WIDTH: 13 61/64"

FINISH: BLACK

DIE CAST ALUMINUM
HINGED ROOF W/ SOLID TOP

PORCELAIN SOCKET
(MOGUL BASE)

FACTORY PREWIRED & TESTED
BALLAST 100W HPS QUAD TAP
SPECIFY VOLTAGE

POLE= SP6247
HEIGHT: 12'
4" FLUTED TUBING
.125" WALL THICKNESS
ALUMINUM ALLOY: 6063-T6

CAST ALUMINUM BASE W/ ACCESS DOOR
& PARKING METER ARMS

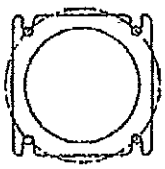

14" DIA. BOLT CIRCLE

BASE= 12 3/4" SQ.

REVISIONS: TAG DELETED PHOTO-EYE & CHANGED TEXT 4/2/98

HADCO® ARCHITECTURAL OUTDOOR LIGHTING
a GENLYTE company

100 Crossway P.O. Box 128
Lititz, Pennsylvania 17340-0128
Phone 717-359-7131
Fax 717-359-9515

JOB NAME:			
CATONSVILLE STREETSCAPE			
SCALE: 1:20	DATE: 01/21/98	DRAWN BY: ADZ	DRAWING NUMBER: S6247
REP: DAVE DEPORTER	QUOTE #:	DIST:	

NOTICE:
THIS DRAWING IS FOR REFERENCE ONLY. CHECK FOR LATEST REVISION PRIOR TO ORDERING

PRODUCT APPROVALS		
SALES	ENG.	CUST.

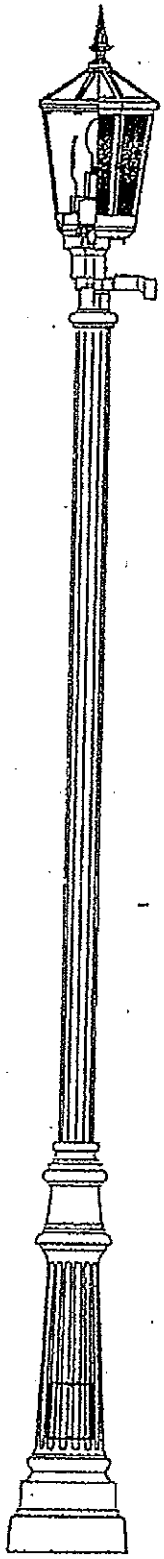

FIXTURE: S6247

DIMENSIONS
HEIGHT: 35 15/64"
WIDTH: 13 61/64"

FINISH: BLACK

DIE CAST ALUMINUM
HINGED ROOF W/ SOLID TOP

PORCELAIN SOCKET
(MOGUL BASE)

FACTORY PREWIRED & TESTED
BALLAST 100W HPS QUAD TAP
SPECIFY VOLTAGE

POLE= SP6247A
HEIGHT: 12'
4" FLUTED TUBING
.125" WALL THICKNESS
ALUMINUM ALLOY: 6063-T6

CAST ALUMINUM BASE W/ ACCESS DOOR

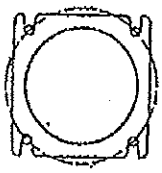

14" DIA. BOLT CIRCLE

BASE= 12 3/4" SQ.

REVISIONS:

HADCO®
ARCHITECTURAL OUTDOOR LIGHTING
a CENTUR company

100 Craftway P.O. Box 128
Littlestown, Pennsylvania 17340-0128
Phone 717-359-7131
Fax 717-359-9515

JOB NAME:			
CATONSVILLE STREETSCAPE			
SCALE: 1:20	DATE: 01/21/98	DRAWN BY: ADZ	DRAWING NUMBER: S6247A
REP: DAVE DEPORTER	QUOTE #:	DIST.:	

NOTICE:
THIS DRAWING IS FOR REFERENCE ONLY. CHECK FOR LATEST REVISION PRIOR TO ORDERING

SALES	ENG.	CUST.

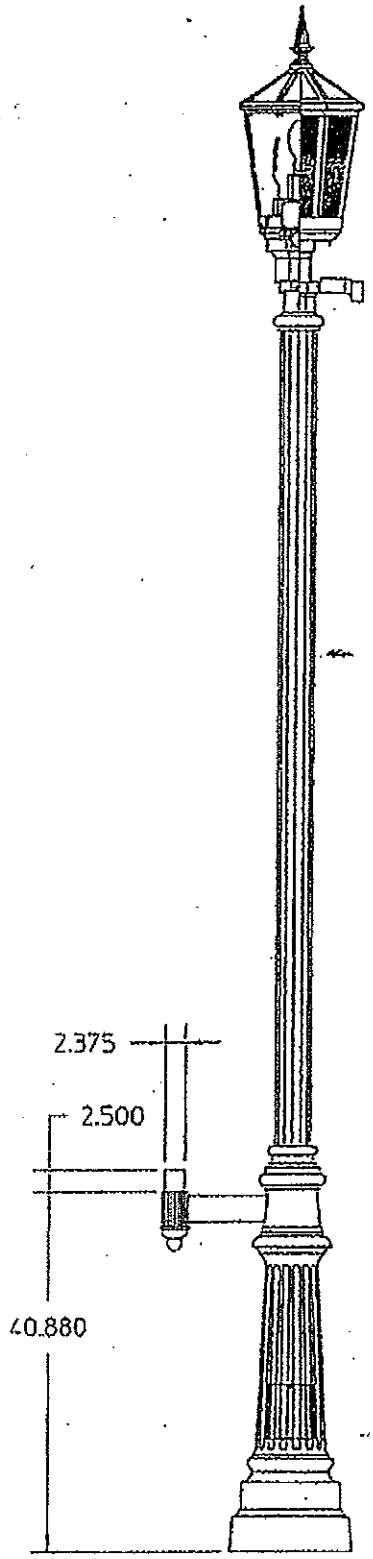

FIXTURE: S6247

DIMENSIONS
HEIGHT: 35 15/64"
WIDTH: 13 61/64"

FINISH: BLACK

DIE CAST ALUMINUM
HINGED ROOF W/ SOLID TOP

PORCELAIN SOCKET
(MOGUL BASE)

FACTORY PREWIRED & TESTED
BALLAST 100W HPS QUAD TAP
SPECIFY VOLTAGE

POLE= SP6247B
HEIGHT: 12'
4" FLUTED TUBING
.125" WALL THICKNESS
ALUMINUM ALLOY: 6063-T6

CAST ALUMINUM BASE W/ ACCESS DOOR
& (1) PARKING METER ARM

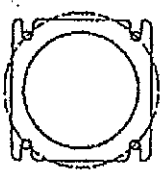

14" DIA. BOLT CIRCLE

BASE= 12 3/4" SQ.

REVISIONS:

HADCO® ARCHITECTURAL OUTDOOR LIGHTING — a GENLYTE company —

100 Railway P.O. Box 128
Lilliestown, Pennsylvania 17340-0128
Phone 717-359-7131
Fax 717-359-9515

JOB NAME:			
CATONSVILLE STREETSCAPE			
SCALE: 1:20	DATE: 01/21/98	DRAWN BY: ADZ	DRAWING NUMBER: S6247B
REP: DAVE DEPORTER	QUOTE #:	DIST:	

PRODUCT APPROVALS		
SALES	ENG.	CUST.
	MB	

NOTICE:
THIS DRAWING IS FOR REFERENCE ONLY. CHECK FOR LATEST REVISION PRIOR TO ORDERING

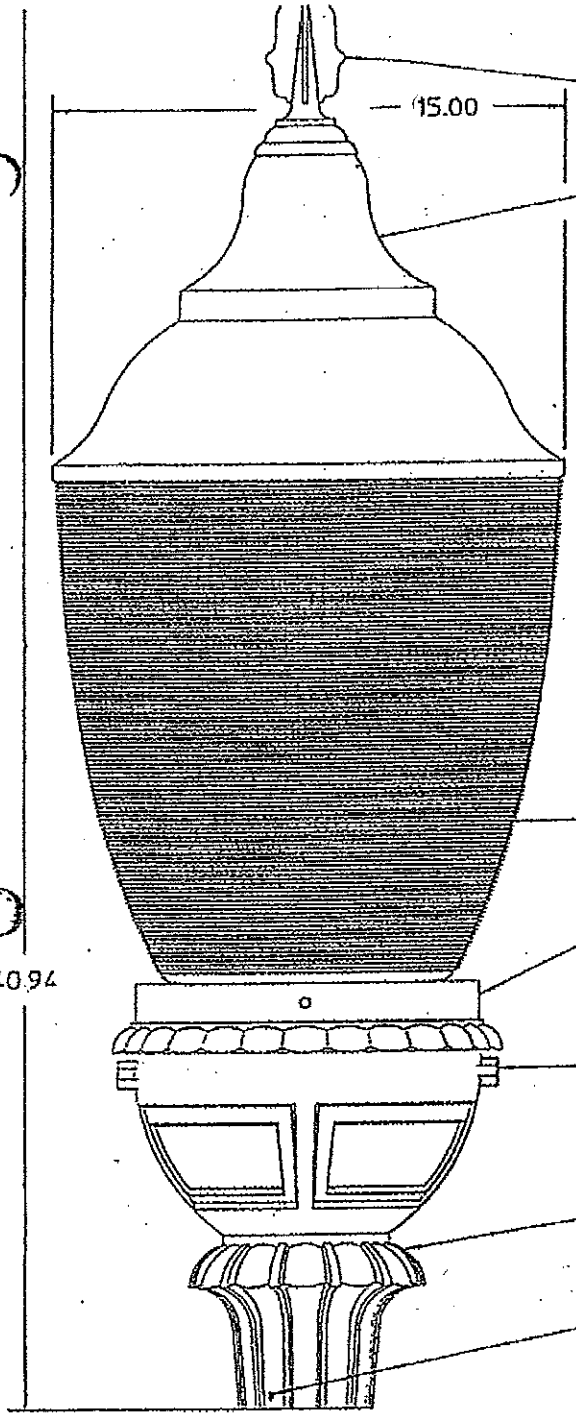

CAST ALUMINUM FINIAL

SPUN ALUMINUM ROOF

SPECULAR ALUMINUM SMALL REFLECTOR W/ HOUSE-SIDE SHIELD

PORCELAIN SOCKET (MOGUL BASE), (LAMP BY OTHERS)

SPUN ALUMINUM BALLAST COVER (REMOVABLE)

FACTORY PREWIRED AND TESTED BALLAST 100W HPS, 120V HPF

PRISMATIC ACRYLIC REFRACTOR GLOBE (TYPE V)

CAST ALUMINUM GLOBE HOLDER

CAST ALUMINUM WEATHERPROOF BALLAST ENCLOSURE WITH HINGED ACCESS DOOR

3" I.D. SLIP FITTER

STAINLESS STEEL FASTENERS

FINISH: BLACK

POD DETAIL

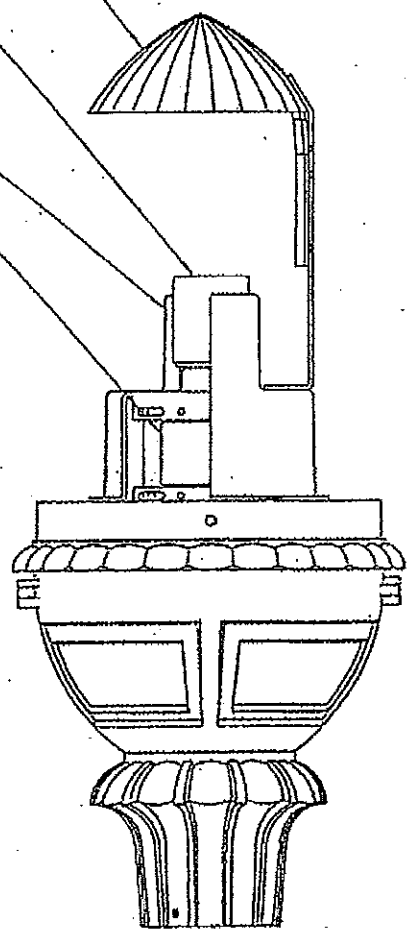

REVISIONS:

HADCO® ARCHITECTURAL OUTDOOR LIGHTING
a GENLYTE company

100 Craftway P.O. Box 128
Littlestown, Pennsylvania 17340-0128
Phone 717-359-7131
Fax 717-359-9515

JOB NAME:			
CITY OF PARKVILLE/DUNDALK			
SCALE: 1:5	DATE: 04/29/99	DRAWN BY: TAG	DRAWING NUMBER: S6290D
REP: GENLYTE BALTIMORE		QUOTE #:	DIST.:

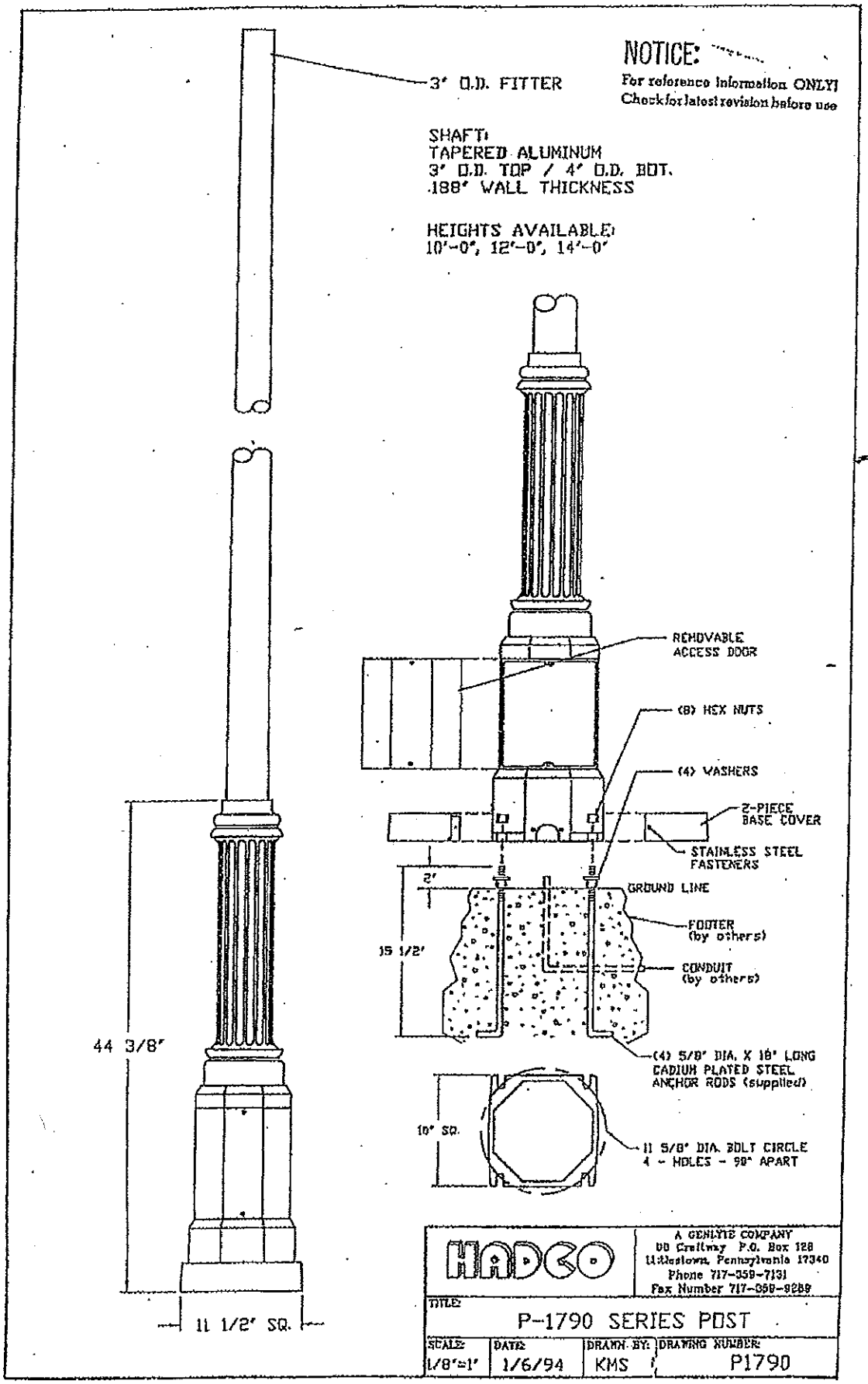
NOTICE:
For reference information ONLY!
Check for latest revision before use
3" O.D. FITTER
SHAFT:
TAPERED ALUMINUM
3" O.D. TOP / 4" O.D. BOT.
.188" WALL THICKNESS
HEIGHTS AVAILABLE:
10'-0", 12'-0", 14'-0"
REMOVABLE ACCESS DOOR
(8) HEX NUTS
(4) WASHERS
2-PIECE BASE COVER
STAINLESS STEEL FASTENERS
2"
GROUND LINE
FOOTER (by others)
15 1/2"
CONDUIT (by others)
44 3/8"
(4) 5/8" DIA. X 18" LONG CADIUM PLATED STEEL ANCHOR RODS (supplied)
10" SQ.
11 5/8" DIA. BOLT CIRCLE 4 - HOLES - 90° APART
11 1/2" SQ.
HADCO
A GENLYTE COMPANY
100 Crestway P.O. Box 128
Littlestown, Pennsylvania 17340
Phone 717-359-7131
Fax Number 717-359-9289
TITLE:
P-1790 SERIES POST
SCALE: 1/8"=1'
DATE: 1/6/94
DRAWN BY: KMS
DRAWING NUMBER: P1790

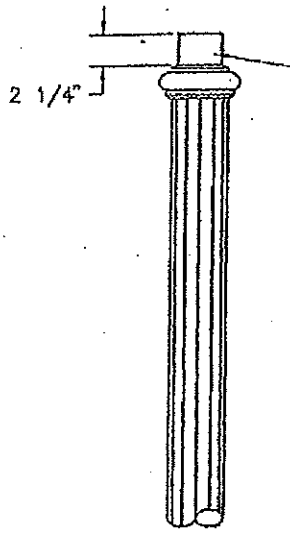

NOTICE:
For reference information ONLY!
Check for latest revision before use

SHAFT:
4" O.D. STRAIGHT FLUTED ALUMINUM
.125" WALL THICKNESS

HEIGHTS AVAILABLE:
10', 12', 14'

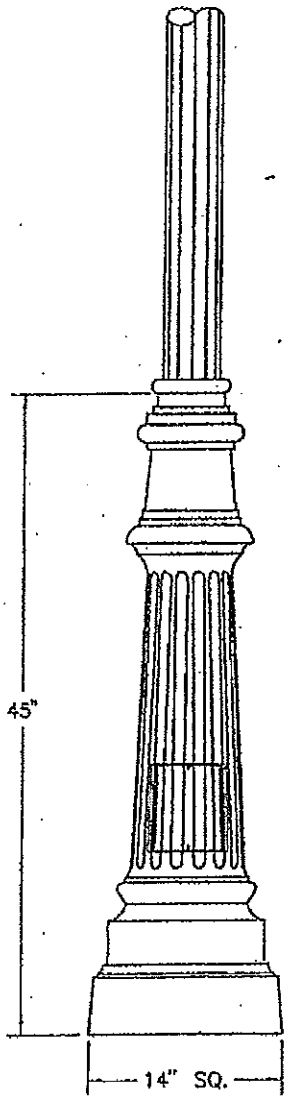

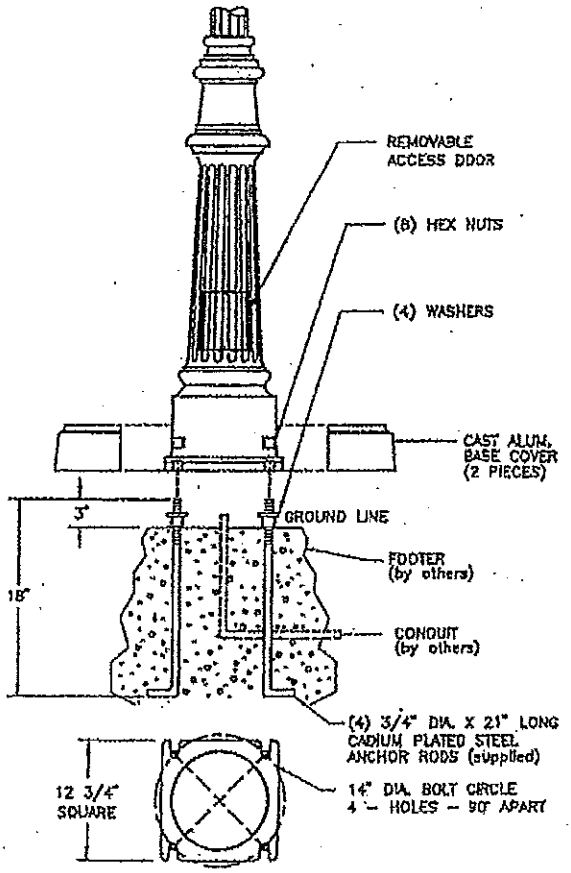

HADCO

A DENLYTE COMPANY
100 Craftway P.O. Box 128
Littlestown, Pennsylvania 17340
Phone 717-359-7131
Fax Number 717-359-9289

TITLE: P-2560 SERIES POST

SCALE	DATE	DRAWN BY	DRAWING NUMBER
1/8"=1'	8/25/93	KMS	P2560

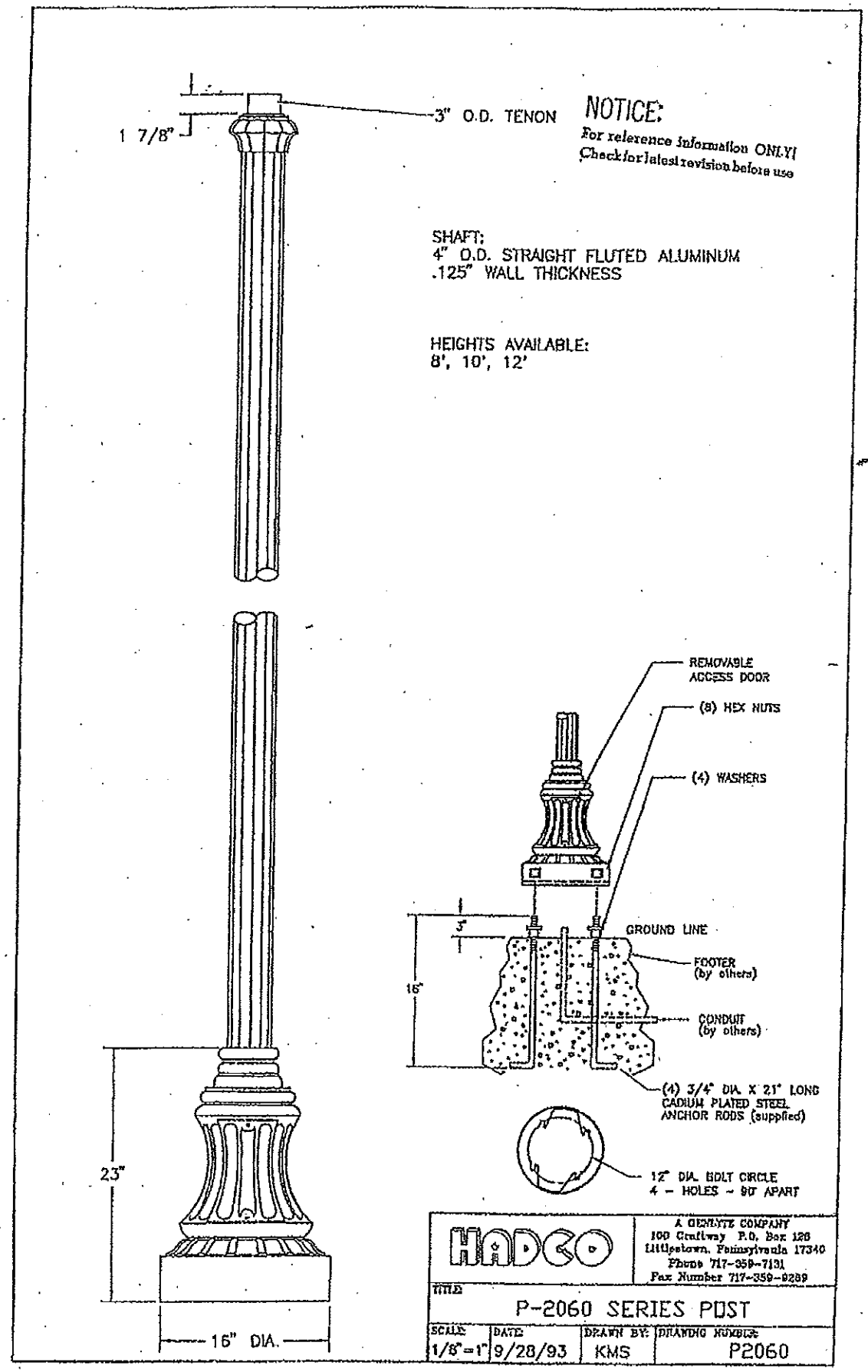
1 7/8"
3" O.D. TENON
NOTICE:
For reference information ONLY!
Check for latest revision before use
SHAFT:
4" O.D. STRAIGHT FLUTED ALUMINUM
.125" WALL THICKNESS
HEIGHTS AVAILABLE:
8', 10', 12'
REMOVABLE ACCESS DOOR
(8) HEX NUTS
(4) WASHERS
3"
GROUND LINE
FOOTER (by others)
18"
CONDUIT (by others)
(4) 3/4" DIA. X 21" LONG CADIUM PLATED STEEL ANCHOR RODS (supplied)
12" DIA. BOLT CIRCLE
4 - HOLES - 90° APART
23"
16" DIA.
HADCO
A GENLYTE COMPANY
100 Craftway P.O. Box 126
Littlestown, Pennsylvania 17340
Phone 717-359-7131
Fax Number 717-359-9289
TITLE
P-2060 SERIES POST
SCALE 1/8"=1"
DATE 9/28/93
DRAWN BY: KMS
DRAWING NUMBER P2060

HADCO

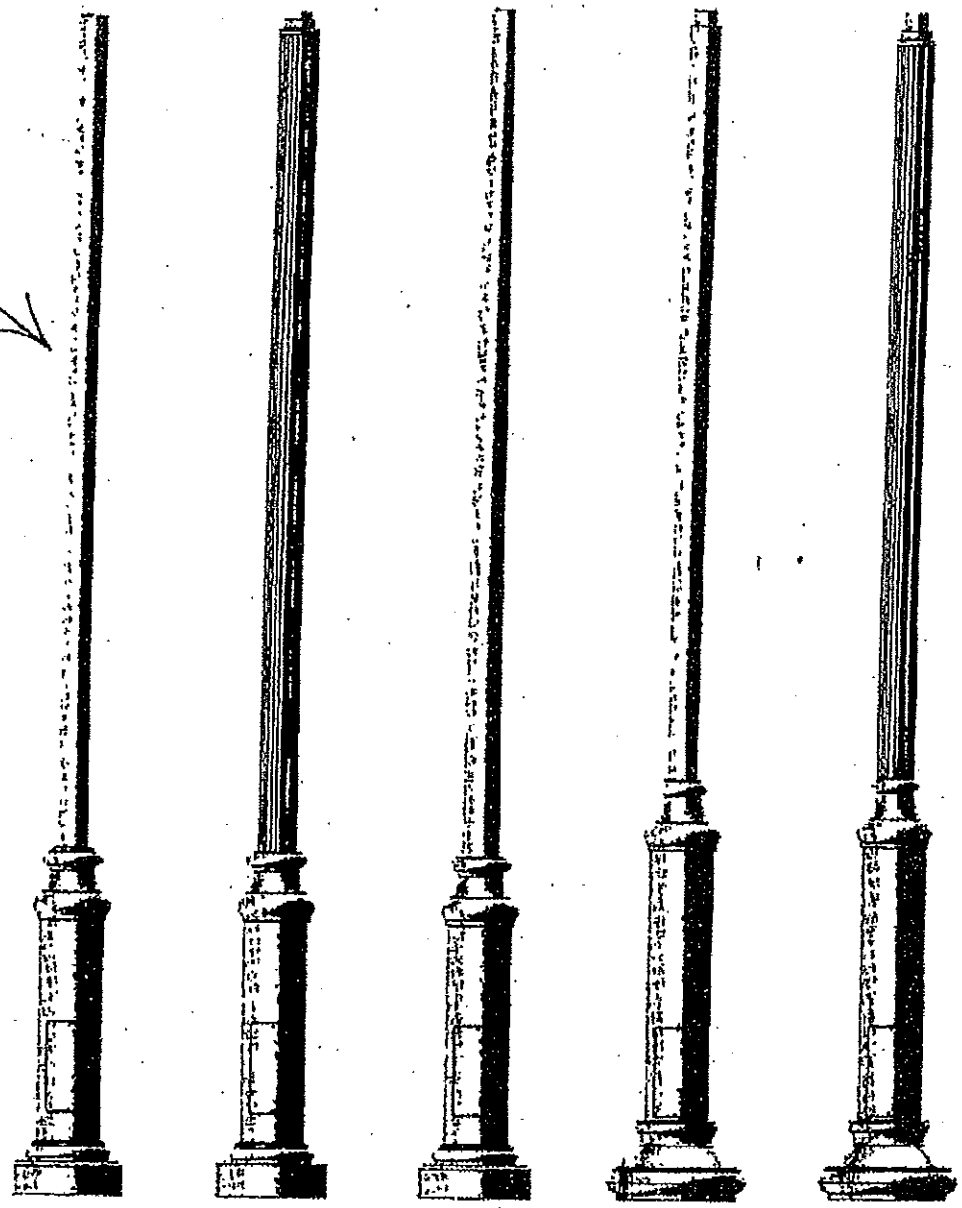

MODEL #	P-4030	P-4055	P-4020	P-4130	P-4155
TENON/TOP	3" OD	3" OD	3" OD	3" OD	3" OD
(Base Template)					
BOLT CIRCLE	8" 12" dia	8" 12" dia	8" 12" dia	8"	
ANCHOR RODS	(4) 3/4" x 19"	(4) 3/4" x 19"	(4) 3/4" x 19"	(1)	
BASE	15" dia. x 44" H	15" dia. x 44" H	12" dia. x 44" H	19" c	
BASE COVER	Internal Anchor Rods	Internal Anchor Rods	Internal Anchor Rods	Interna	
HAND HOLE OPENING	6" x 12"	6" x 12"	6" x 12"	6	
SHAFT	4" Straight Smooth	5" dia. Flat Plate	5" to 3" dia Tapered	4" Stra	
WALL	.23 Aluminum	.188 - .267 Alum	.125 Aluminum	.125	

HEIGHT/EPA	HT.	80	100	HT.	80	100	HT.	80	100	HT.	80	100	HT.	80	100
	10'	16.97	10.25	10'	21.18	12.71	10'	23.42	14.80	10'	18.28	11.51	10'	23.09	20.97
	12'	12.54	7.67	12	24.12	15.29	12	16.30	11.38	12'	13.77	9.45	12'	25.35	15.92
	14'	9.86	4.62	14	15.15	9.52	14	11.46	6.98	14'	8.56	5.10	14	16.15	10.01
	16	6.1	3.37	16	12.91	7.73	16	8.66	5.62	16'	6.15	3.75	16	13.45	8.11

Ordering Guide

C3181A: LUMINAIRE
CP3181: POLE

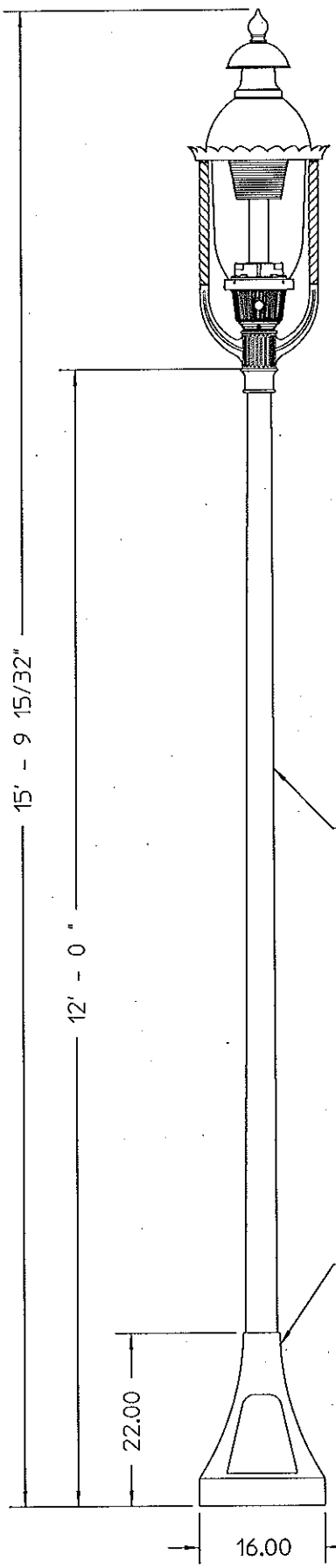

Color:
Green

POLE: 4"-3" SMOOTH TAPER
0.125" WALL THICKNESS
6063-T6 ALUMINUM ALLOY

BASE:
CAST ALUMINUM
#356HM ALLOY
W/ ACCESS DOOR

BASE DETAIL:
REFERENCE TEMPLATE
#T01000084

Luminaire Detail
Scale 1:16

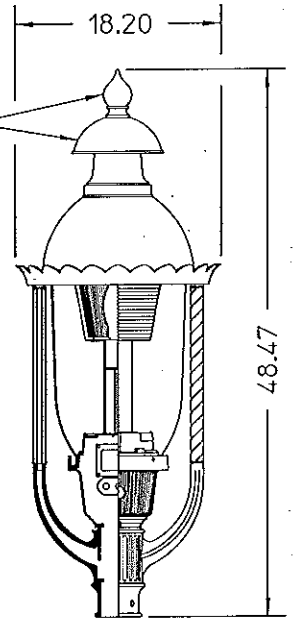

FINIAL &
VENT CAP:
PAINT COPPER

Luminaire Matrix

COLOR:
- _ BLACK
- _ WHITE
- _ VERDE
- _ BRONZE
- X GREEN

OPTICS:
- X TYPE III BOWL
- _ TYPE V BOWL
- _ TYPE III CUTOFF
- _ TYPE V CUTOFF

PHOTO CONTROL:
- _ BUTTON-EYE
- X TWIST-LOCK RECEPT.
- _ NONE

SOCKET:
- X MEDIUM
- _ MOGUL

WATTAGE:
- _ 70W MH
- _ 100W MH
- _ 175W MH
- _ 250W MH
- _ 70W HPS
- _ 100W HPS
- X 150W HPS

VOLTAGE:
- X 120V
- _ 208V
- _ 240V
- _ 277V
- _ 347V

PRODUCT APPROVALS	
HADCO	
CUST.	

CONFIDENTIAL:
This drawing is confidential and proprietary to the HADCO Division of the Genlyte Group (HADCO), and may not be reproduced without the express written consent of HADCO. Any use hereof or of any of the information or detail herein shall be for the sole benefit of HADCO. ©2007 HADCO

NOTICE:
THIS DRAWING IS FOR REFERENCE ONLY. CHECK FOR LATEST REVISION PRIOR TO ORDERING

Full Specification (Complete Assembly) Drawing

HADCO®
a Genlyte company
ISO 9000: 2000 Certified
"Over 50 Years of Excellence"

100 Craftway P.O. Box 128
Littlestown, Pennsylvania 17340-0128
Phone 717-359-7131
Fax 717-359-9515
www.hadco.com

JOB NAME: Baltimore County – Towson Standard	
REP. TERRITORY: 14	DRAWN BY: SMK
SCALE: 1:20	DATE: 01/26/07
DRAWING NUMBER: C3181-DWG02	
REP: Genlyte Baltimore	
REV: A	PCN: 07-001
BY: .	DATE: .

Ordering Guide:

C10444: LUMINAIRE
CA10444: TWIN BRACKET ASSEMBLY
CA10444A: TRANSFORMER BASE
CP10444: POLE

Color:
Green

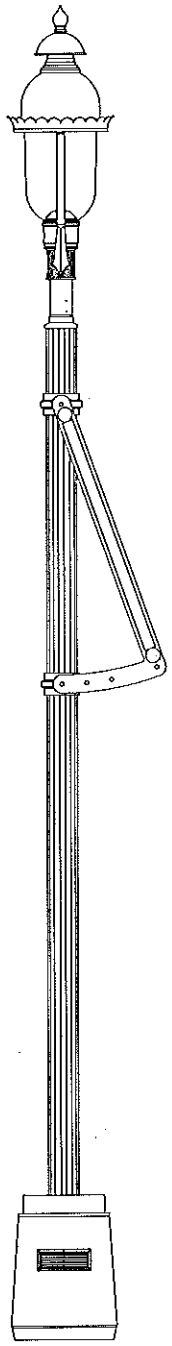

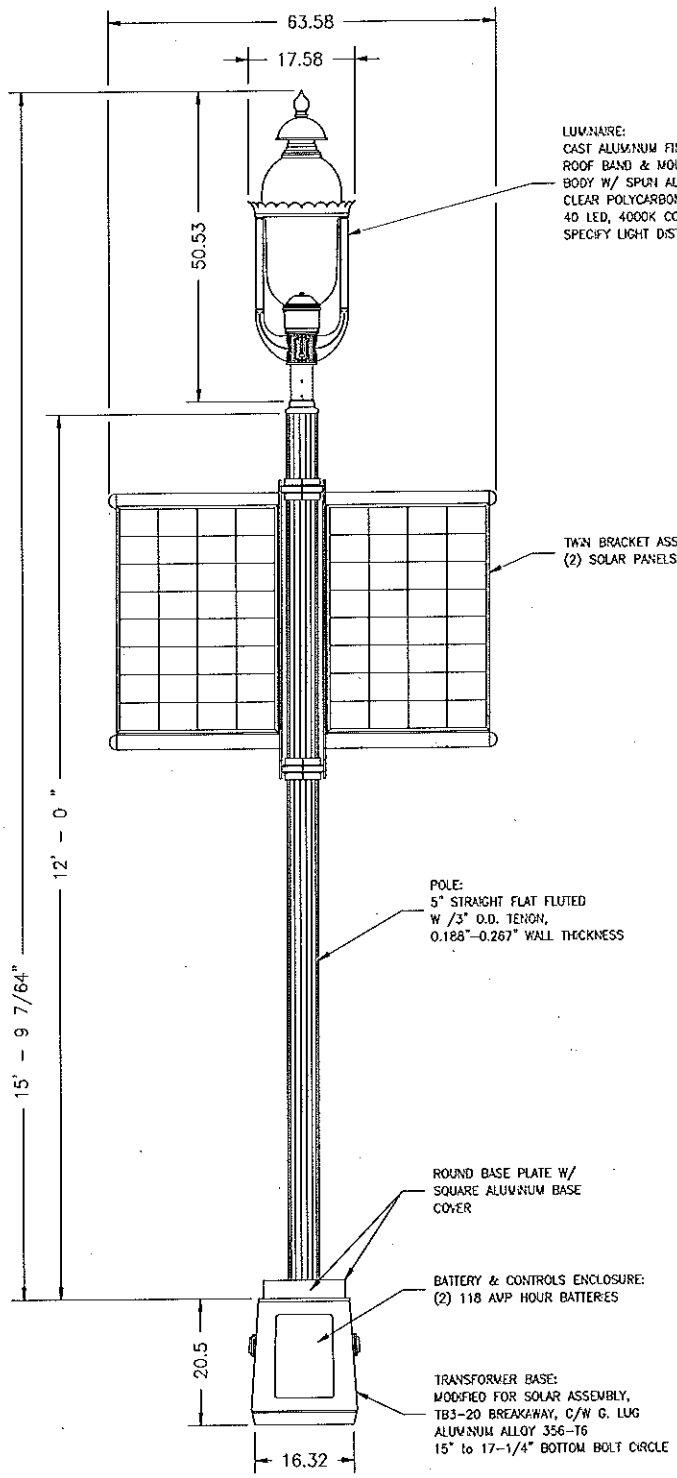

TRANSFORMER BASE
ANCHOR TEMPLATE

Scale 1:10

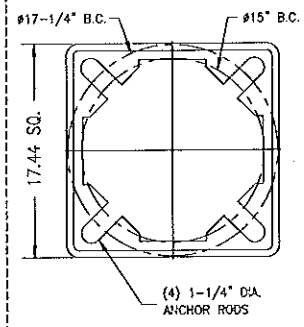

PRODUCT APPROVALS	
HADCO	JLN
CUST.	

CONFIDENTIAL:
This drawing is confidential and proprietary to Philips Hadco and may not be reproduced without the express written consent of Philips Hadco. Any use hereof or of any of the information or detail herein shall be for the sole benefit of Philips Hadco.

NOTICE:
THIS DRAWING IS FOR REFERENCE ONLY. CHECK FOR LATEST REVISION PRIOR TO ORDERING

Full Specification (Complete Assembly) Drawing

PHILIPS HADCO

100 Craftway Drive
Littlestown, Pa 17340
Phone 800-331-4185
Fax 717-359-9289
www.hadco.com

JOB NAME: Baltimore County, Towson LED Standard	
REP. TERRITORY: 142	DRAWN BY: SMK
SCALE: 1:20	DATE: 08/31/12
DRAWING NUMBER: C10444-DWG01	
REP: Deporter, Dominick	
REV: A	FOR: 12-077
BY: .	DATE: .

ATTACHMENT A

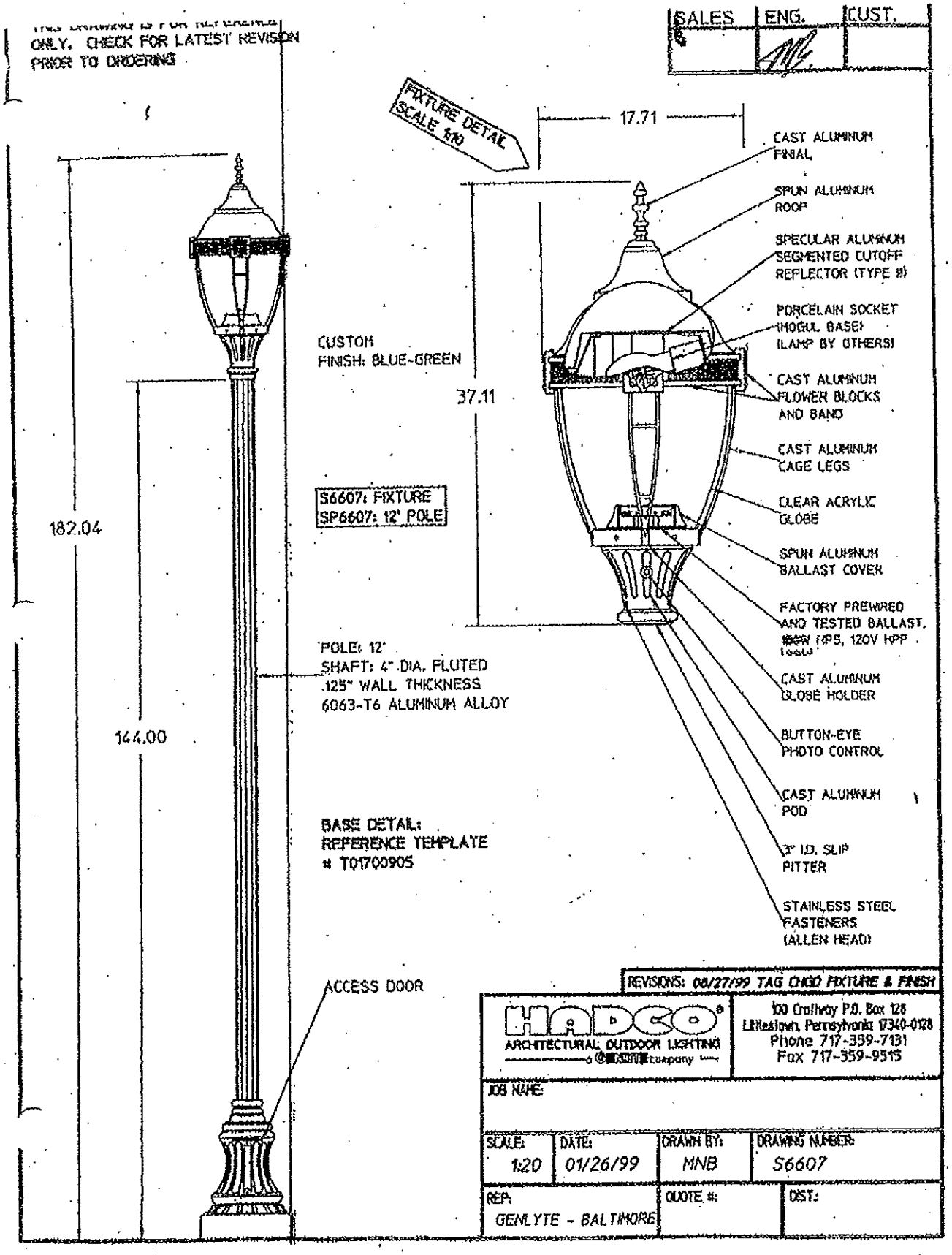

Harmonia

Revolutionary cost-effective aluminum luminaire combination. The Harmonia Series Z60A™, Z65B™, Z65C™, Z65D™, Z65E™ and Z60B™ luminaires are manufactured of cast-aluminum components. Harmonia performance: The state-of-the-art prismatic vessel is available in a wide range of optical components. Harmonia durability: Consider the physical properties of the vessel: injection molded from durable, UV-stabilized polycarbonate, to cast-aluminum parts, to all other metal components comprise the luminaire. Easy maintenance: The luminaire's unique tool-free Rotomatic quarter-turn access mechanism with stainless-steel hinge pins and pressure-sensitive gasket provides quick access to the lamp, ballast and optical system. Harmonia's ballast is easily accessible by simply pulling the top of the luminaire and removing the integrated hinge. Luminal surface treatment: Aluminum luminaires, mountings and poles are protected by a Luminal surface treatment. Luminal values the chemical-resistant, durable surface protection. Nu-Salon dry coating, polyester based, textured powder finish provides resistance.

Luminaire

The Z60A™ luminaire consists of a one-piece injected acrylic or polycarbonate prismatic vessel with a cast-aluminum decorative hood suspended from a 2 3/8" (60 mm) round tube. The vessel's aluminum guard and deflector are assembled to the vessel by a toolfree Rotomatic quarter-turn access mechanism.

Though similar to the Z60A model, the Z60B™ luminaire offers a different guard and deflector.

The Z65C™ luminaire has no guard and the spun-aluminum deflector is mechanically assembled on the hood.

The Z65B™ features a spun-aluminum decorative cover over the hood.

The Z65E™ is similar to the Z65B but features the same deflector as the Z65C.

The Z65F™ is similar to the Z65B but features a cast-aluminum decorative guard.

Z60A, Z60B, Z65B, Z65C and Z65E luminaires are UL and CSA approved.

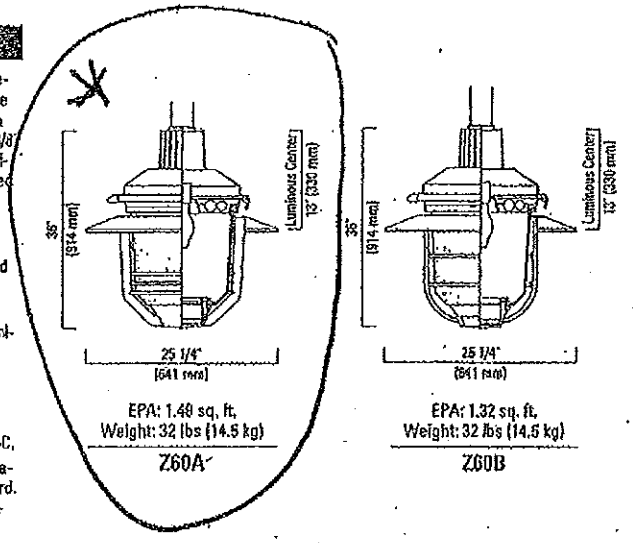

Lamp Guide

Wattage	Harmonia
70H, medium	—
100H, medium	—
150H, medium	—
175H, mogul	—
35S, medium	—
50S, mogul	—
70S, mogul	—
100S, mogul	—
150S, mogul	—

Harmonia™ series luminaires accommodate H.I.D. or incandescent lamps up to 175 W.

The UL or CSA-recognized CWA-type ballast features a -30F° (-34C°) lamp-starting capacity, a power factor of 90% or better and a regulation of lamp within ±10% of rated input voltage. HPS ballasts operate within ANSI trapezoidal limits.

The ballast is integrated in the luminaire's hood and is accessible without tools.

Optical Systems

Large round acrylic or polycarbonate refractor featuring two series of prisms controlling the lamp's horizontal and vertical luminous flux

5:	Symmetrical (V)
3:	Asymmetrical (III)
2:	Asymmetrical (II)

Refractor available:

AC:	Acrylic
PC:	Polycarbonate

For further information, refer to the Outdoor Lighting Application Guide.

Mountings

M20A

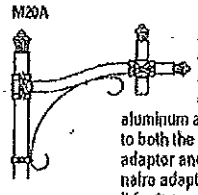

Consists of a 2 7/8" (73 mm) double-bent extruded-aluminum arm welded to both the pole-top adaptor and the luminaire adaptor. It features a decorative bent-aluminum rod and cast-aluminum caps. The arm is mechanically assembled to the pole.

M20C

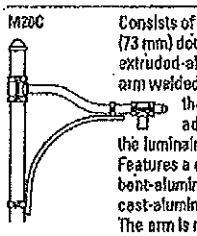

Consists of a 2 7/8" (73 mm) double-bent extruded-aluminum arm welded to both the pole-top adaptor and the luminaire adaptor. Features a decorative bent-aluminum rod and cast-aluminum caps. The arm is mechanically assembled to the pole.

M20F

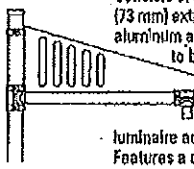

Consists of a 2 7/8" (73 mm) extruded-aluminum arm welded to both the pole-top adaptor and the luminaire adaptor. Features a decorative flat aluminum panel with openings and cast-aluminum caps. The arm is mechanically assembled to the pole.

M20G

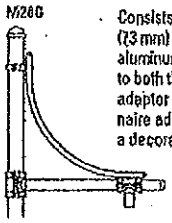

Consists of a 2 7/8" (73 mm) bent extruded-aluminum arm welded to both the pole-top adaptor and the luminaire adaptor. It features a decorative bent-aluminum rod and cast-aluminum caps. The arm is mechanically assembled to the pole.

M20H

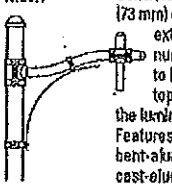

Consists of a 2 7/8" (73 mm) double-bent extruded-aluminum arm welded to both the pole-top adaptor and the luminaire adaptor. Features a decorative bent-aluminum rod and cast-aluminum caps. The arm is mechanically assembled to the pole.

M20M

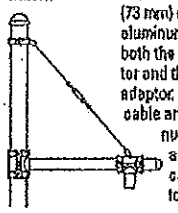

Consists of a 2 7/8" (73 mm) extruded-aluminum arm welded to both the pole-top adaptor and the luminaire adaptor. Features a steel cable and cast-aluminum caps. The arm is mechanically assembled to the pole.

Consult the Pole Guide for details and the complete line of poles.

Configurations

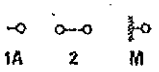

Ordering Sample

Luminaire	Lamp	Distribution	Voltage	Mounting & Configuration	Pole	Finish	Options
Z60B	70S	5-AC	240	M20A-1A	APR4F-16	BKTX	FS

Lumec reserves the right to substitute materials or change the manufacturing process of its products without prior notification.

LUMEC Pole Guide

M20G, M20H, M20M

Suspended Luminaire Mountings

M20G

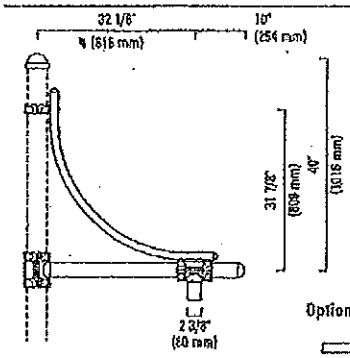

Configurations

1A 2 M

Optional Pole Caps

CAP1 CAP3

EPA: 1.10 sq.ft. Weight: 15.0 lbs. (6.8 kg)

Specifications:
Mounting: features a 2 7/8" -round (73 mm), straight extruded-aluminum arm, welded to a cast-aluminum pole adaptor and cap.
The mounting will be mechanically assembled on the side of a 4" (102 mm) or 5" (127 mm) pole, with the help of a decorative cast-aluminum back plate and four nuts and bolts.
The mounting will be placed at the height indicated by a positioning hole on the pole. A suspended luminaire adaptor is welded to a cast-aluminum support, mechanically secured to the arm by a decorative cast-aluminum support plate and four nuts and bolts. The support plate features a decorative tube and cap.
A cast-aluminum cap will be supplied for the pole.
A decorative curved, 1.66" (42 mm) round extruded-aluminum piece will be mechanically secured to the pole by a set of cast-aluminum adaptors, complete with two nuts and bolts, and to the arm by the tenon support plate.
All mountings are pre-wired for greater installation ease.
See page 79 for Finish and Option details.

M20H

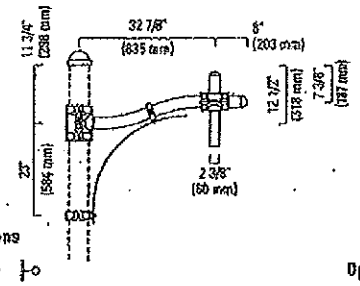

Configurations

1A 2 M

Optional Pole Caps

CAP1 CAP3

EPA: 1.00 sq.ft. Weight: 12.0 lbs. (5.4 kg)

Specifications:
Mounting: features a 2 7/8" -round (73 mm), double-bended extruded-aluminum arm, welded to a cast-aluminum pole adaptor and decorative cap.
The mounting will be mechanically assembled on the side of a 4" (102 mm) or 5" (127 mm) pole, with the help of a decorative cast-aluminum back plate and four nuts and bolts.
The mounting will be placed at the height indicated by a positioning hole on the pole. A suspended luminaire adaptor is welded to a cast-aluminum support, mechanically secured to the arm by a decorative cast-aluminum support plate and four nuts and bolts. The support plate features a tube and cap.
A cast-aluminum cap will be supplied for the pole.
A decorative curved flat piece of aluminum will be mechanically secured to the pole by a set of cast-aluminum adaptors, complete with two nuts and bolts, and by a screw on the arm.
All mountings are pre-wired for greater installation ease.
See page 79 for Finish and Option details.

M20M

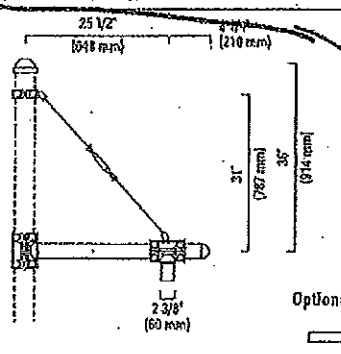

Configuration

1A 2 M

Optional Pole Caps

CAP1 CAP3

EPA: 0.80 sq.ft. Weight: 12.0 lbs. (5.5 kg)

Specifications:
Mounting: features a 2 7/8" -round (73 mm), straight extruded-aluminum arm, welded to a cast-aluminum pole adaptor and decorative cap.
The mounting will be mechanically assembled on the side of a 4" (102 mm) or 5" (127 mm) pole, with the help of a decorative cast-aluminum back plate and four nuts and bolts.
The mounting will be placed at the height indicated by a positioning hole on the pole. A suspended luminaire adaptor is welded to a cast-aluminum adaptor, mechanically secured to the arm by a decorative cast-aluminum support plate and four nuts and bolts.
A cast-aluminum decorative cap will be supplied for the pole.
A steel cable, with tightening mechanism, will be mechanically secured to the pole by a set of cast-aluminum adaptors complete with two nuts, bolts and a steel cable anchor, and to the tenon support-plate by an steel cable anchor.
All mountings are pre-wired for greater installation ease.
See page 79 for Finish and Option details.

Note: Lumec reserves the right to modify the above details to reflect changes in the cost of materials and/or production and/or design without prior notice.

APR4

4" (102 mm) Round Aluminum Pole

Pole Guide

LUMEC

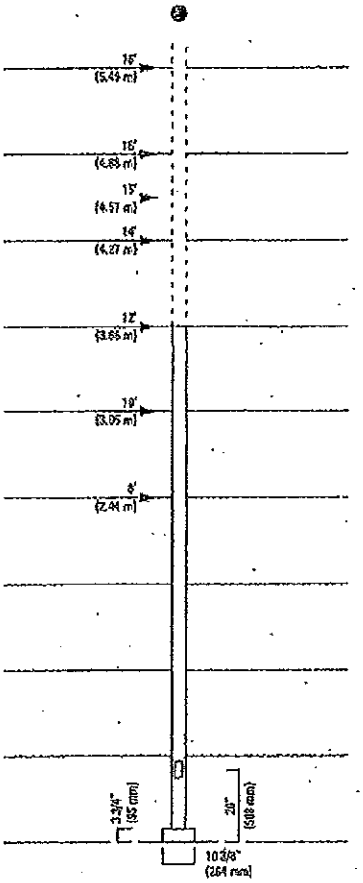

Optional round decorative base covers

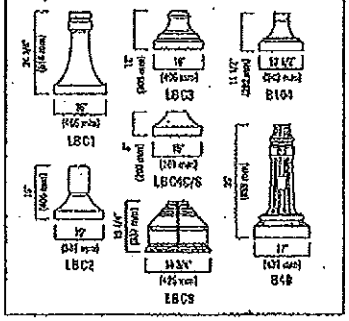

Base Details:

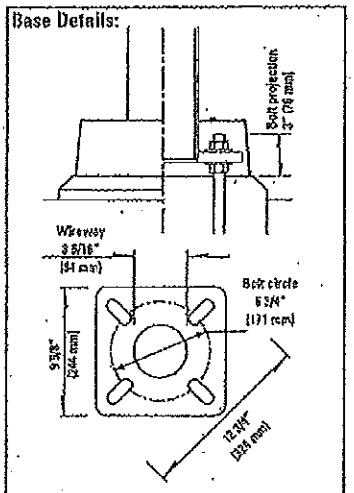

Comes with 4 anchor bolts, 8 nuts and washers.
B.C. from: 6 3/4" to 10" (171 to 254 mm)

Specifications:

Pole: made from a one-piece, seamless 4"-round (102 mm) tube of extruded aluminum welded to both the top and bottom of a reinforced base cast from zinc-rich aluminum.
A 2" by 4 1/2" (51 by 114 mm) maintenance opening, complete with cover and copper ground lug, is centered 20" (508 mm) from the bottom of the anchor plate.
Base cover: square base cover made from two pieces of formed aluminum mechanically fastened to the base with stainless steel screws.
Finish: "Hot Dip" chemical etching preparation.
Lumital polyester powder coat textured finish.
Available in 16 standard colors.
Durable UV-resistant exterior finish as per # ASTM G7 and outstanding salt-spray resistance according to # ASTM D2247 testing procedures.

Options:

- DE: Pole buried 5' (1524 mm) in the ground (see details on page 83)
- LS: Provision for loudspeaker outlet
- PH7: Button-type photoelectric cell (specify operating voltage)
- PH8: Quarter-turn type photoelectric cell (specify operating voltage)
- PH9: Shorting cap for single phase only
- DR: Duplex receptacle (120V line volt. only)
- GFI: DR with common ground fault interrupter (120V line voltage only)
- HB: Hinged base (16.0 ft./4.8 m max.)
- BASXX: One single banner arm
- BABSXX: One single break-away banner arm
- BADXX: One double banner arm
- BABDXX: One double break-away banner arm

Two-piece round decorative base covers:

- LBC1: #1 cast-aluminum
- LBC2: #2 cast-aluminum
- LBC3: #3 cast-aluminum
- LBC4C: #4 cast-aluminum
- LBC9: #9 cast-aluminum
- B40: B40 cast-aluminum
- B104: B104 cast-aluminum

One-piece round decorative base cover:

- LBC4S: #4 spun-aluminum

Note: EPA recommendations are calculated according to AASHTO standards and include a 30% gust factor, with a 50-lb. (22.7 kg) load applied 1ft. (305 mm) above the center of the pole.

Ordering Information

Catalogue number	Nominal height		Section		Wall thickness		Weight		EPA rating 70mph	80mph	100mph	Base size		Bolt circle		Anchor bolts	
	ft.	m	in.	mm	in.	mm	lbs.	kg	ft.²	ft.²	ft.²	in.	mm	in.	mm	in.	mm
APR4F-8	8	2.44	4	102	0.125	3.2	21	10	12.5	9.5	5.8	9 5/8	244	6 3/4	171	3/4-20	19-508
APR4U-8	8	2.44	4	102	0.226	5.7	32	14	22.4	17.2	10.8	9 5/8	244	6 3/4	171	3/4-20	19-508
APR4F-10	10	3.05	4	102	0.125	3.2	24	11	9.5	7.1	4.1	9 5/8	244	6 3/4	171	3/4-20	19-508
APR4U-10	10	3.05	4	102	0.226	5.7	38	17	16.7	12.6	7.8	9 5/8	244	6 3/4	171	3/4-20	19-508
APR4F-12	12	3.66	4	102	0.125	3.2	28	13	6.7	5.0	2.9	9 5/8	244	6 3/4	171	3/4-20	19-508
APR4U-12	12	3.66	4	102	0.226	5.7	44	20	11.5	8.6	5.2	9 5/8	244	6 3/4	171	3/4-20	19-508
APR4W-12	12	3.66	4	102	0.318	8.1	58	26	15.3	11.5	7.0	9 5/8	244	6 3/4	171	3/4-20	19-508
APR4F-14	14	4.27	4	102	0.125	3.2	31	14	3.6	2.5	1.3	9 5/8	244	6 3/4	171	3/4-20	19-508
APR4U-14	14	4.27	4	102	0.226	5.7	51	23	6.6	4.8	2.8	9 5/8	244	6 3/4	171	3/4-20	19-508
APR4W-14	14	4.27	4	102	0.318	8.1	67	30	8.9	6.6	3.9	9 5/8	244	6 3/4	171	3/4-20	19-508
APR4F-15	15	4.57	4	102	0.125	3.2	33	15	2.8	1.9	—	9 5/8	244	6 3/4	171	3/4-20	19-508
APR4U-15	15	4.57	4	102	0.226	5.7	54	24	5.5	3.9	2.1	9 5/8	244	6 3/4	171	3/4-20	19-508
APR4W-15	15	4.57	4	102	0.318	8.1	71	32	7.5	5.5	3.1	9 5/8	244	6 3/4	171	3/4-20	19-508
APR4F-16	16	4.88	4	102	0.125	3.2	35	16	2.2	1.4	—	9 5/8	244	6 3/4	171	3/4-20	19-508
APR4U-16	16	4.88	4	102	0.226	5.7	57	26	4.6	3.2	1.6	9 5/8	244	6 3/4	171	3/4-20	19-508
APR4W-16	16	4.88	4	102	0.318	8.1	75	34	6.3	4.5	2.8	9 5/8	244	6 3/4	171	3/4-20	19-508
APR4U-18	18	5.49	4	102	0.226	5.7	63	28	3.0	1.9	—	9 5/8	244	6 3/4	171	3/4-27	19-686
APR4W-18	18	5.49	4	102	0.318	8.1	84	38	4.5	3.1	1.4	9 5/8	244	6 3/4	171	3/4-27	19-686
APR4W-20	20	6.10	4	102	0.318	8.1	93	42	3.1	1.9	—	9 5/8	244	6 3/4	171	3/4-27	19-686

Other pole thicknesses are available for use with banner arms. Consult factory.
Lumec neither designs nor makes recommendations as to the design of concrete bases.

9-99

8 Note: Lumec reserves the right to modify the above details to reflect changes in the cost of materials and/or production and/or design without prior notice.

P604A

Round Aluminum Bottleneck Pole

Pole Guide

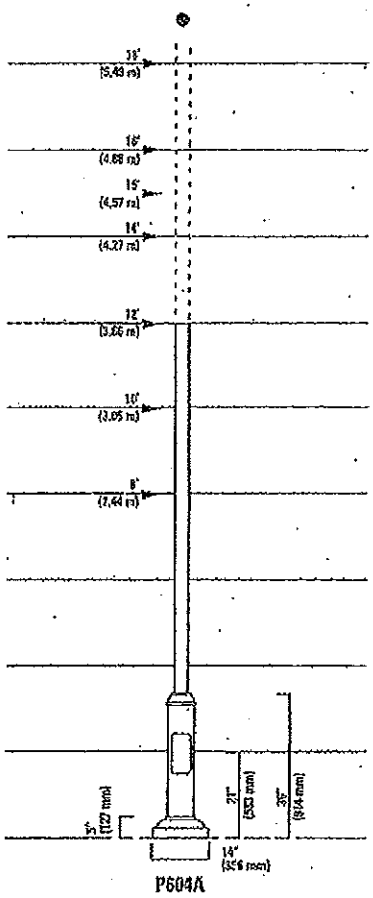

Base Details:

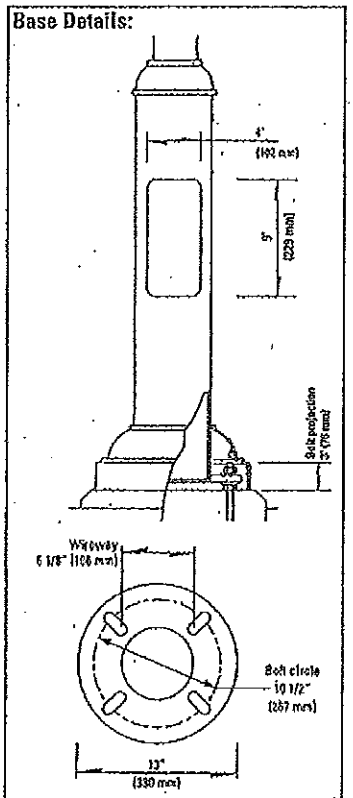

Comes with 4 anchor bolts, 8 nuts and washers.
B.C. from: 8 3/4" to 11" (222 to 279 mm)

Specifications:

Pole: made from a one-piece, seamless 4"-round (102 mm) tube of extruded aluminum welded over and in a 6 5/8"-round (168 mm) extruded aluminum pole base.
The assembly is welded to both the top and bottom of a reinforced base cast from zinc-rich aluminum.
A 4" by 9" (102 by 229 mm) maintenance opening, complete with cover and copper ground lug, is centered 21" (533 mm) from the bottom of the anchor plate.
Joint cover: made from two pieces of cast aluminum mechanically fastened to the junction with stainless steel screws.
Base cover: made from two pieces of cast aluminum mechanically fastened to the base with stainless steel screws.
Finish: "Hot Dip" chemical etching preparation.
Lumital polyester powder coat textured finish.
Available in 16 standard colors.
Durable UV-resistant exterior finish as per # ASTM G7 and outstanding salt-spray resistance according to # ASTM D2247 testing procedures.

Options:

- DE: Pole base buried 5' (1524 mm) in the ground. (see details on page 83).
- LS: Provision for loud speaker outlet
- PH7: Button-type photoelectric cell (specify operating voltage)
- PH8: Quarter-turn type photoelectric cell (specify operating voltage)
- PH9: Shorting cap for single phase only
- DR: Duplex receptacle (120V line volt. only)
- GFI: DR with common ground fault interrupter (120V line voltage only)
- BASXX: One single banner arm
- BABSXX: One single break-away banner arm
- BADXX: One double banner arm
- BABDXX: One double break-away banner arm

Note: EPA recommendations are calculated according to AASHTO standards and include a 30% gust factor, with a 50-lb. (22.7 kg) load applied at 1ft. (305 mm) above the center of the pole.
The maximum EPA rating shown is 30.0 sq. ft. Some poles may exceed this rating.

Ordering Information

Catalogue number	Nominal height		Section		Wall thickness		Weight		EPA rating 70mph	80mph	100mph	Base size		Bolt circle		Anchor bolts	
	ft.	m	in.	mm	in.	mm	lbs.	kg	ft.²	ft.²	ft.²	in.	mm	in.	mm	in.	mm
P604AF-8	8	2.44	4	102	0.125	3.2	27	12	18.4	14.3	9.2	13	330	10 1/2	267	3/4-20	19-508
P604AU-8	8	2.44	4	102	0.226	5.7	37	17	30.0	25.0	16.3	13	330	10 1/2	267	3/4-20	19-508
P604AF-10	10	3.05	4	102	0.125	3.2	31	14	13.2	10.2	6.4	13	330	10 1/2	267	3/4-20	19-508
P604AU-10	10	3.05	4	102	0.226	5.7	41	19	23.4	18.0	11.3	13	330	10 1/2	267	3/4-20	19-508
P604AF-12	12	3.66	4	102	0.125	3.2	35	16	9.9	7.4	4.4	13	330	10 1/2	267	3/4-20	19-508
P604AU-12	12	3.66	4	102	0.226	5.7	45	20	15.8	11.8	7.3	13	330	10 1/2	267	3/4-20	19-508
P604AF-13	13	3.97	4	102	0.125	3.2	36	16	8.1	6.0	3.5	13	330	10 1/2	267	3/4-20	19-508
P604AU-13	13	3.97	4	102	0.226	5.7	46	21	13.1	9.9	5.9	13	330	10 1/2	267	3/4-20	19-508
P604AF-14	14	4.27	4	102	0.125	3.2	38	17	5.3	3.8	2.2	13	330	10 1/2	267	3/4-20	19-508
P604AU-14	14	4.27	4	102	0.226	5.7	48	22	8.7	6.5	3.9	13	330	10 1/2	267	3/4-20	19-508
P604AF-15	15	4.57	4	102	0.125	3.2	40	18	4.3	3.0	1.6	13	330	10 1/2	267	3/4-20	19-508
P604AU-15	15	4.57	4	102	0.226	5.7	50	23	7.3	5.3	3.0	13	330	10 1/2	267	3/4-20	19-508
P604AU-16	16	4.88	4	102	0.226	5.7	52	24	6.0	4.3	2.4	13	330	10 1/2	267	3/4-20	19-508
P604AW-16	16	4.88	4	102	0.318	8.1	74	34	7.9	5.8	3.2	13	330	10 1/2	267	3/4-20	19-508
P604AU-18	18	5.49	4	102	0.226	5.7	55	25	4.2	2.8	1.3	13	330	10 1/2	267	3/4-27	19-686
P604AW-18	18	5.49	4	102	0.318	8.1	87	39	5.6	3.9	2.0	13	330	10 1/2	267	3/4-27	19-686
P604AW-20	20	6.10	4	102	0.318	8.1	96	44	3.9	2.6	1.0	13	330	10 1/2	267	3/4-27	19-686

Other pole thicknesses are available for use with banner arms. Consult factory.
Lumec neither designs nor makes recommendations as to the design of concrete bases.

54 Note: Lumec reserves the right to modify the above details to reflect changes in the cost of materials and/or production and/or design without prior notice.

Luminaire Matrix

PRODUCT:
X RX164

COLOR: (specify)
_ BLACK
_ WHITE
_ BRONZE
_ GRAY

OPTICS:
_ TYPE II
X TYPE III
_ TYPE IV
_ TYPE V

COLOR TEMPERATURE:
_ 3000K (warm)
X 4000K (neutral)
_ 5700K (cool)

VOLTAGE:
X 120–277 VAC
_ 347–480 VAC

DRIVE CURRENT:
_ 350mA
X 530mA

PHOTO CONTROL:
X TWIST–LOCK RECEPTACLE
_ NONE

DIMMING CONTROL:
_ CUSTOM DIMMING SCHEDULE
_ WIRELESS CONTROLS
X NONE

SURGE SUPRESSION:
_ STANDARD BUILT IN <3kV
X ADDITIONAL 10kV/10kA

HOUSE SIDE SHIELD:
_ HOUSE SIDE SHIELD
X NONE

Specifications:

- All housing components (housing, lens frame, door) are low copper die–cast aluminum, flat tempered glass lens.
- 64, 4000K (neutral) Philips Lumileds Luxeon R LEDs, typical 75 color rendering index (CRI), injection molded, acrylic optical plates, IP66 rated LED module, 80,000 hrs. with >70 lumen maintenance @ 25°C.
- Integral Philips Advance Xitanium LED driver, class 1, IP66 rated, 530mA, IntelliVolt 120–277 VAC, 50–60Hz, RoHS compliant, 10kV/10kA surge suppression.
- UL8750 & UL1598 compliant, ETL & cETL listed to U.S & Canadian safety standards for wet locations, manufactured to ISO 9001:2008 standards, vibration tested to ANSI C136.31 for bridge applications, luminaire photometric testing performed in accordance with IESNA LM–79 guidelines.
- Intertek report #100831474CRT–008
- Watts consumed: 101.5
- Delivered lumens: 8860
- LPW: 87.3
- EPA: 0.54 sq. ft.
- Max. Weight: 19.5 lbs.

NOTE:
CARTON TO HAVE MEC # & BGE # ON BOX LABEL.

Ordering Guide:

C10610B: LUMINAIRE, BRONZE
C10610J: LUMINAIRE, GRAY

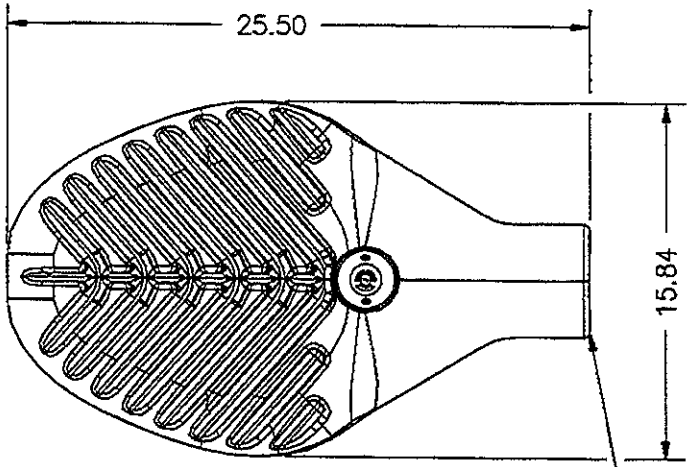

MOUNTING:
ACCEPTS 1–1/2" to 2–1/2" or 1–1/4" to 2" NPS HORIZONTAL TENON OR ARM, MINUMUM 6" LG.

150 Comparable

BGE MEC#
L0218 – BRONZE
L0207 – GRAY

PHOTO CONTROL:
TWIST–LOCK RECEPTACLE
(eye by others)

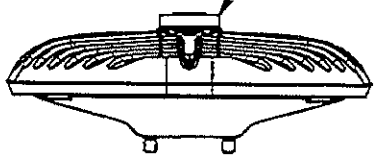

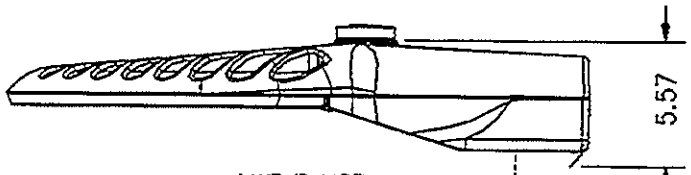

LAMP ID LABEL:
BLACK LETTERS ON WHITE BACKGROUND

BGE & City of Baltimore approved

Full Specification Fixture Drawing

NOTICE:
THIS DRAWING IS FOR REFERENCE ONLY. CHECK FOR LATEST REVISION PRIOR TO ORDERING

CONFIDENTIAL:
This drawing is confidential and proprietary to Philips Hadco and may not be reproduced without the express written consent of Philips Hadco. Any use hereof or of any of the information or detail herein shall be for the sole benefit of Philips Hadco.

PRODUCT APPROVALS	
HADCO	JAZ
CUST.	

PHILIPS HADCO

100 Craftway Drive
Littlestown, Pa 17340
Phone 800–331–4185
Fax 717–359–9289
www.hadco.com

JOB NAME:	REP. TERRITORY:
BGE Standard – RX1	142

SCALE:	DATE:	DRAWN BY:	DRAWING NUMBER:
1:8	09/24/12	SMK	C10610–DWG03

REP:	REV:	PCN:
Deporter, Dominick	E	14–038
	BY: SMK	DATE: 08/25/14

Luminaire Matrix

PRODUCT:
X RX2128

COLOR: (specify)
_ BLACK
_ WHITE
_ BRONZE
_ GRAY

OPTICS:
_ TYPE II
X TYPE III
_ TYPE IV
_ TYPE V

COLOR TEMPERATURE:
_ 3000K (warm)
X 4000K (neutral)
_ 5700K (cool)

VOLTAGE:
X 120–277 VAC
_ 347–480 VAC

DRIVE CURRENT:
_ 350mA
X 530mA

PHOTO CONTROL:
X TWIST–LOCK RECEPTACLE
_ NONE

DIMMING CONTROL:
_ 4 HRS 25% REDUCTION
_ 4 HRS 50% REDUCTION
_ 4 HRS 75% REDUCTION
_ 6 HRS 25% REDUCTION
_ 6 HRS 50% REDUCTION
_ 6 HRS 75% REDUCTION
_ 8 HRS 25% REDUCTION
_ 8 HRS 50% REDUCTION
_ 8 HRS 75% REDUCTION
_ CUSTOM DIMMING SCHEDULE
_ WIRELESS CONTROLS
X NONE

SURGE SUPRESSION:
_ STANDARD BUILT IN <3KV
X ADDITIONAL 10KV/10kA

HOUSE SIDE SHIELD:
_ HOUSE SIDE SHIELD
X NONE

Specifications:

- All housing components (housing, lens frame & door) are low copper die–cast aluminum, flat tempered glass lens.
- 128, 4000K (neutral) Philips Lumileds Luxeon R LEDs, typical 75 Color Rendering Index (CRI), >92,000 hours of operational life (at 25°C ambient temperature & 70% lumen maintenance), injection molded Type III optical plates, IP66 rated LED module.
- Integral Philips Advance Xitanium LED driver (2 per luminaire), class 1, IP66 rated, 530mA, IntelliVolt 120–277 VAC, 50–60Hz, RoHS compliant, field replaceable 10kV/10kA surge suppression.
- UL8750 & UL1598 compliant, ETL & cETL listed to U.S & Canadian safety standards for wet locations, manufactured to ISO 9001:2008 Standards, vibration tested to ANSI C136.31 for Bridge applications, luminaire photometric testing performed in accordance with IESNA LM–79 guidelines.
- Watts consumed: 204.40
- Delivered lumens: 17983
- LPW: 88.0
- EPA: 0.82 sq. ft.
- Max. Weight: 32.0 lbs.

NOTE:
CARTON TO HAVE MEC # & BGE #ON BOX LABEL.

Ordering Guide:
C10610C: LUMINAIRE

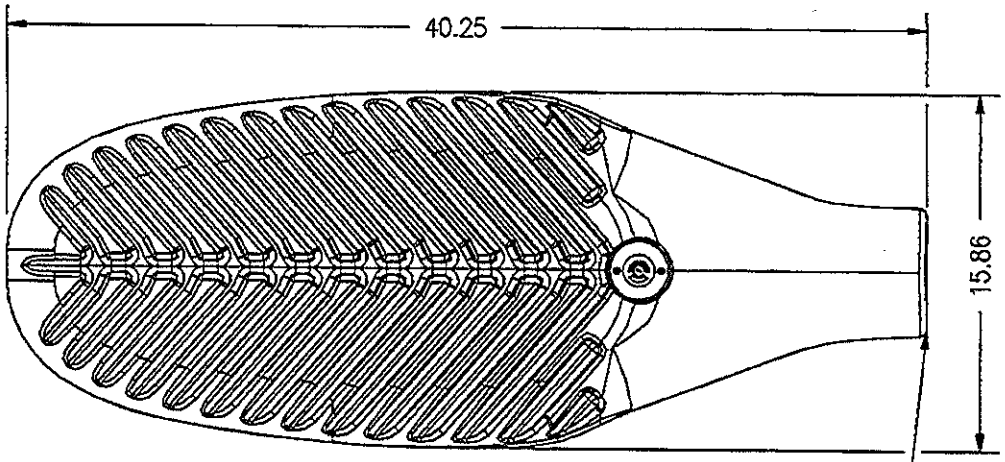

BGE MEC#	
L0219	BRONZE
L0209	GRAY

250 Compariable

PHOTO CONTROL:
TWIST–LOCK RECEPTACLE
(eye by others)

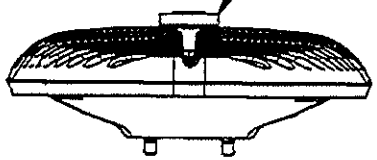

MOUNTING:
ACCEPTS 1–1/2" to 2–1/2" O.D.
or 1–1/4" to 2" NPS HORIZONTAL
TENON OR ARM, MINIMUM 6" LG.

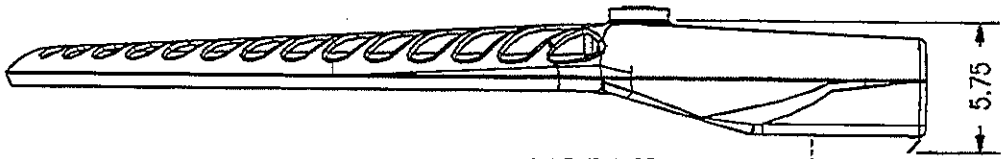

LAMP ID LABEL:
BLACK LETTERS ON
WHITE BACKGROUND

BGE & City of Baltimore approved

Full Specification Fixture Drawing

NOTICE:
THIS DRAWING IS FOR REFERENCE ONLY. CHECK FOR LATEST REVISION PRIOR TO ORDERING

CONFIDENTIAL:
This drawing is confidential and proprietary to Philips Hadco and may not be reproduced without the express written consent of Philips Hadco. Any use hereof or of any of the information or detail herein shall be for the sole benefit of Philips Hadco.

PRODUCT APPROVALS	
HADCO	JAZ
CUST.	

PHILIPS HADCO

100 Craftway Drive
Littlestown, Pa 17340
Phone 800–331–4185
Fax 717–359–9289
www.hadco.com

JOB NAME:	REP. TERRITORY:
BGE Standard – RX2	142

SCALE:	DATE:	DRAWN BY:	DRAWING NUMBER:
1:8	09/24/12	SMK	C10610–DWG04

REP:	REV: G	PCN: 14–053
Deporter, Dominick	BY: SMK	DATE: 10/20/14

Luminaire Matrix

PRODUCT:
X RX148

COLOR: (specify)
_ BLACK
_ WHITE
_ BRONZE
_ GRAY

OPTICS:
_ TYPE II
X TYPE III
_ TYPE IV
_ TYPE V

COLOR TEMPERATURE:
_ 3000K (warm)
X 4000K (neutral)
_ 5700K (cool)

VOLTAGE:
X 120–277 VAC
_ 346–480 VAC

DRIVE CURRENT:
MULTI TAP:
_ 350mA
X 530mA
_ 700MA

PHOTO CONTROL:
X TWIST–LOCK RECEPTACLE
_ NONE

DIMMING CONTROL:
_ CUSTOM DIMMING SCHEDULE
_ WIRELESS CONTROLS
X NONE

SURGE SUPRESSION:
_ STANDARD BUILT IN <3kV
X ADDITIONAL 10kV/10kA

HOUSE SIDE SHIELD:
_ HOUSE SIDE SHIELD
X NONE

Specifications:

- All housing components (housing, lens frame, door) are low copper die–cast aluminum, flat tempered glass lens.
- 48, 4000K (neutral) Philips Lumileds Luxeon R LEDs, typical 75 color rendering index (CRI), injection molded, acrylic optical plates, IP66 rated LED module, 80,000 hrs. with >70 lumen maintenance @ 25°C.
- Integral Philips Advance Xitanium LED driver, class 1, IP66 rated, 530mA, IntelliVolt 120–277 VAC, 50–60Hz, RoHS compliant, 10kV/10kA surge suppression.
- UL8750 & UL1598 compliant, ETL & cETL listed to U.S & Canadian safety standards for wet locations, manufactured to ISO 9001:2008 standards, vibration tested to ANSI C136.31 for bridge applications, luminaire photometric testing performed in accordance with IESNA LM–79 guidelines.
- Intertek report #100831474CRT–007
- Watts consumed: 78.1
- Delivered lumens: 6888
- LPW: 88.2
- EPA: 0.54 sq. ft.
- Max. Weight: 19.5 lbs.

NOTE:
CARTON TO HAVE MEC # & BGE # ON BOX LABEL.

Ordering Guide:
C10610: LUMINAIRE

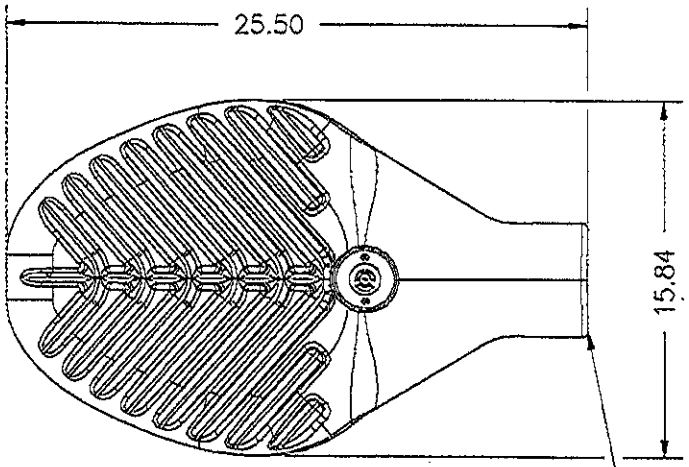

MOUNTING:
ACCEPTS 1–1/2" to 2–1/2" or 1–1/4" to 2" NPS HORIZONTAL TENON OR ARM, MINUMUM 6" LG.

100 Comparable

BGE MEC#
L0217 – BRONZE
L0206 – GRAY

PHOTO CONTROL:
TWIST–LOCK RECEPTACLE
(eye by others)

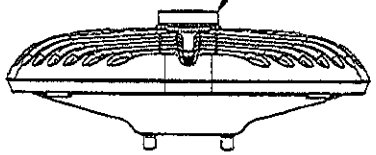

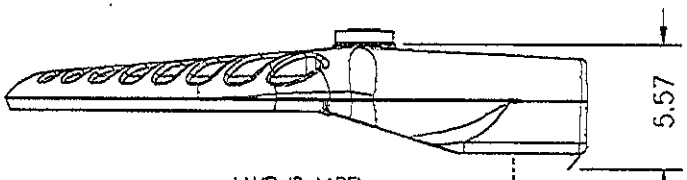

LAMP ID LABEL:
BLACK LETTERS ON WHITE BACKGROUND

BGE & City of Baltimore approved

Full Specification Fixture Drawing

NOTICE:
THIS DRAWING IS FOR REFERENCE ONLY. CHECK FOR LATEST REVISION PRIOR TO ORDERING

CONFIDENTIAL:
This drawing is confidential and proprietary to Philips Hadco and may not be reproduced without the express written consent of Philips Hadco. Any use hereof or of any of the information or detail herein shall be for the sole benefit of Philips Hadco.

PRODUCT APPROVALS

HADCO	JAZ
CUST.	

PHILIPS HADCO
100 Craftway Drive
Littlestown, Pa 17340
Phone 800–331–4185
Fax 717–359–9289
www.hadco.com

JOB NAME:	REP. TERRITORY:
BGE Standard – RX1	142

SCALE:	DATE:	DRAWN BY:	DRAWING NUMBER:
1:8	09/24/12	SMK	C10610–DWG01

REP:	REV:	PCN:
Deporter, Dominick	C	13–021
	BY: SMK	DATE: 03/22/13

Luminaire Matrix

PRODUCT:
X RX180

COLOR:
_ BLACK
_ WHITE
_ BRONZE
X GRAY

OPTICS:
_ TYPE II
X TYPE III
_ TYPE IV
_ TYPE V

COLOR TEMPERATURE:
_ 3000K (warm)
X 4000K (neutral)
_ 5700K (cool)

VOLTAGE:
X 120–277 VAC
_ 347–480 VAC

DRIVE CURRENT:
_ 350mA
X 530mA

PHOTO CONTROL:
X TWIST–LOCK RECEPTACLE
_ NONE

DIMMING CONTROL:
_ CUSTOM DIMMING SCHEDULE
_ WIRELESS CONTROLS
X NONE

SURGE SUPRESSION:
_ STANDARD BUILT IN <3kV
X ADDITIONAL 10kV/10kA

HOUSE SIDE SHIELD:
_ HOUSE SIDE SHIELD
X NONE

Specifications:

- All housing components (housing, lens frame, door) are low copper die–cast aluminum, flat tempered glass lens.
- 80, 4000K (neutral) Philips Lumileds Luxeon R LEDs, typical 75 color rendering index (CRI), injection molded, acrylic optical plates, IP66 rated LED module, 80,000 hrs. with >70 lumen maintenance @ 25°C.
- Integral Philips Advance Xitanium LED driver, class 1, IP66 rated, 530mA, IntelliVolt 120–277 VAC, 50–60Hz, RoHS compliant, 10kV/10kA surge suppression.
- UL8750 & UL1598 compliant, ETL & cETL listed to U.S & Canadian safety standards for wet locations, manufactured to ISO 9001:2008 standards, vibration tested to ANSI C136.31 for bridge applications, luminaire photometric testing performed in accordance with IESNA LM–79 guidelines.
- Intertek report #100925630CRT–002
- Watts consumed: 125.5
- Delivered lumens: 11211
- LPW: 89.3
- EPA: 0.54 sq. ft.
- Max. Weight: 19.5 lbs.

NOTE:
CARTON TO HAVE MEC # & BGE #ON BOX LABEL

Ordering Guide:
C10610D: LUMINAIRE

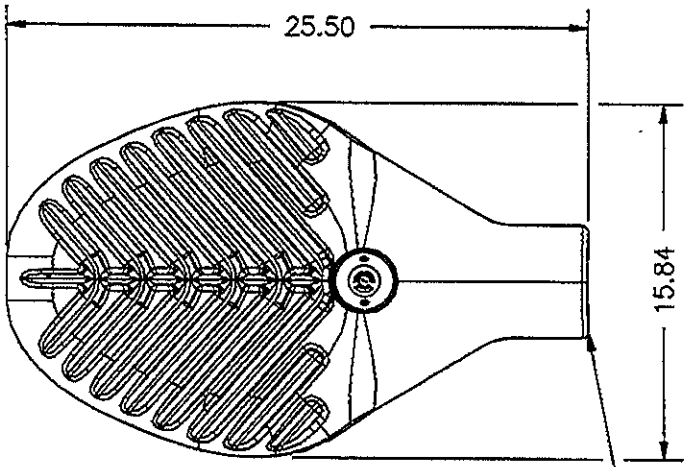

MOUNTING:
ACCEPTS 1–1/2" to 2–1/2" or 1–1/4" to 2" NPS HORIZONTAL TENON OR ARM, MINUMUM 6" LG.

200 Compariable

BGE MEC#
L0238 – BRONZE
L0237 – GRAY

PHOTO CONTROL:
TWIST–LOCK RECEPTACLE
(eye by others)

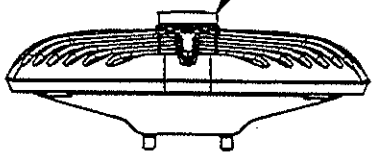

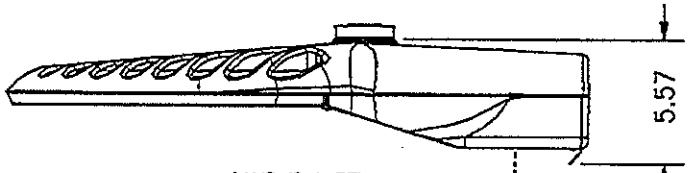

LAMP ID LABEL:
BLACK LETTERS ON WHITE BACKGROUND

BGE & City of Baltimore approved

Full Specification Fixture Drawing

NOTICE:
THIS DRAWING IS FOR REFERENCE ONLY. CHECK FOR LATEST REVISION PRIOR TO ORDERING

PHILIPS HADCO
100 Craftway Drive
Littlestown, Pa 17340
Phone 800–331–4185
Fax 717–359–9289
www.hadco.com

CONFIDENTIAL:
This drawing is confidential and proprietary to Philips Hadco and may not be reproduced without the express written consent of Philips Hadco. Any use hereof or of any of the information or detail herein shall be for the sole benefit of Philips Hadco.

PRODUCT APPROVALS	
HADCO	JAZ
CUST.	

JOB NAME:	REP. TERRITORY:
BGE Standard – RX1	142

SCALE:	DATE:	DRAWN BY:	DRAWING NUMBER:
1:8	02/18/13	SMK	C10610–DWG05

REP:	REV: D	PCN: 14–038
Deporter, Dominick	BY: SMK	DATE: 08/19/14

Luminaire Matrix

PRODUCT:
X RX2160

COLOR: (specify)
_ BLACK
_ WHITE
_ BRONZE
_ GRAY

OPTICS:
_ TYPE II
X TYPE III
_ TYPE IV
_ TYPE V

COLOR TEMPERATURE:
_ 3000K (warm)
X 4000K (neutral)
_ 5700K (cool)

VOLTAGE:
X 120–277 VAC
_ 347–480 VAC

DRIVE CURRENT:
_ 350mA
X 530mA

PHOTO CONTROL:
X TWIST–LOCK RECEPTACLE
_ NONE

DIMMING CONTROL:
_ 4 HRS 25% REDUCTION
_ 4 HRS 50% REDUCTION
_ 4 HRS 75% REDUCTION
_ 6 HRS 25% REDUCTION
_ 6 HRS 50% REDUCTION
_ 6 HRS 75% REDUCTION
_ 8 HRS 25% REDUCTION
_ 8 HRS 50% REDUCTION
_ 8 HRS 75% REDUCTION
_ CUSTOM DIMMING SCHEDULE
_ WIRELESS CONTROLS
X NONE

SURGE SUPRESSION:
_ STANDARD BUILT IN <3kV
X ADDITIONAL 10kV/10kA

HOUSE SIDE SHIELD:
_ HOUSE SIDE SHIELD
X NONE

Specifications:

- All housing components (housing, lens frame, door) are low copper die–cast aluminum, flat tempered gloss lens.
- 160, 4000K (neutral) Philips Lumileds Luxeon R LEDs, typical 75 color rendering index (CRI), injection molded, acrylic optical plates, IP66 rated LED module, 80,000 hrs. w/ >70 lumen maintenance @ 25°C.
- Integral Philips Advance Xitanium LED driver (2 per luminaire), class 1, IP66 rated, 530mA, IntelliVolt 120–277 VAC, 50–60Hz, RoHS compliant. 10kV/10kA surge suppression.
- UL8750 & UL1598 compliant, ETL & cETL listed to U.S & Canadian safety standards for wet locations, manufactured to ISO 9001:2008 standards, vibration tested to ANSI C136.31 for bridge applications, luminaire photometric testing performed in accordance with IESNA LM–79 guidelines.
- Intertek report #100925630CRT–004
- Watts consumed: 252.8
- Delivered lumens: 22969
- LPW: 90.9
- EPA: 0.82 sq. ft.
- Max. Weight: 32 lbs.

NOTE:
CARTON TO HAVE MEC # & BGE #ON BOX LABEL.

Ordering Guide:
C10610E: LUMINAIRE

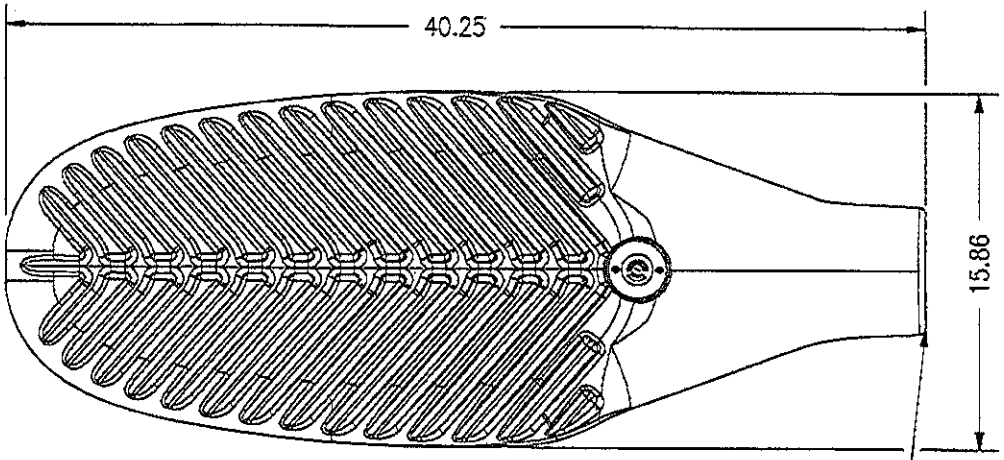

MOUNTING:
ACCEPTS 1–1/2" to 2–1/2" O.D. or 1–1/4" to 2" NPS HORIZONTAL TENON OR ARM, MINIMUM 6" LG.

BGE MEC#	
L0220	BRONZE
L0210	GRAY

400 Compariable

PHOTO CONTROL:
TWIST–LOCK RECEPTACLE
(eye by others)

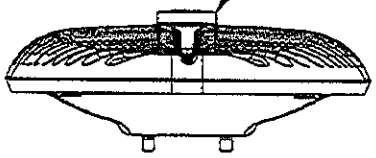

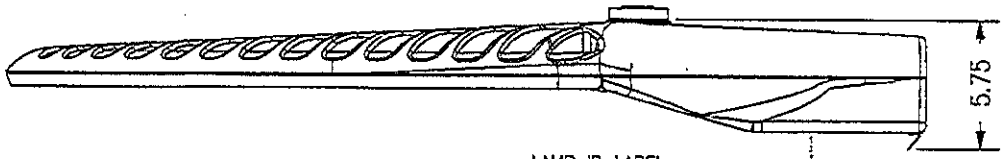

LAMP ID LABEL:
BLACK LETTERS ON WHITE BACKGROUND

BGE & City of Baltimore approved

Full Specification Fixture Drawing

NOTICE:
THIS DRAWING IS FOR REFERENCE ONLY. CHECK FOR LATEST REVISION PRIOR TO ORDERING

PHILIPS HADCO

100 Craftway Drive
Littlestown, Pa 17340
Phone 800–331–4185
Fax 717–359–9289
www.hadco.com

CONFIDENTIAL:
This drawing is confidential and proprietary to Philips Hadco and may not be reproduced without the express written consent of Philips Hadco. Any use hereof or of any of the information or detail herein shall be for the sole benefit of Philips Hadco.

PRODUCT APPROVALS	
HADCO	JAZ
CUST.	

JOB NAME:	REP. TERRITORY:
BGE Standard – RX2	142

SCALE:	DATE:	DRAWN BY:	DRAWING NUMBER:
1:8	05/03/13	SMK	C10610–DWG06

REP:	REV: A	PCN: 13–034
Deporter, Dominick	BY: .	DATE: .